ETA-Danmark A/S
Kollegievej 6
DK-2920 Charlottenlund
Tel. +45 72 24 59 00
Fax +45 72 24 59 04
Internet www.etadanmark.dk

Authorised and notified according to Article 10 of the Council Directive 89/106/EEC of 21 December 1988 on the approximation of laws, regulations and administrative provisions of Member States relating to construction products

MEMBER OF EOTA

European Technical Approval ETA-06/0270

This ETA replaces the previous ETA with the same number and validity from 2009-01-13 to 2014-01-13

Trade name:	Simpson Strong-Tie Joist Hangers type SAE, SAI, SAEL, SAIL, SBE, SAIX, Standard, I, BSD, BSDI, SBG, SDED/G
Holder of approval:	SIMPSON STRONG-TIE A/S Hedegaardsvej 4 – 11, Boulstrup DK-8300 Odder Tel. +45 87 81 74 00 Fax +45 87 81 74 09 Internet www.simpsonstrongtie.dk
Generic type and use of construction product:	Three-dimensional nailing plate (Joist hanger for wood to wood connections and wood to concrete or steel connections)
Valid from: to:	2011-06-30 2014-01-13
Manufacturing plant:	Simpson Strong-Tie A/S Hedegaardsvej 4-11, Boulstrup 8300 Odder Denmark Simpson Strong-Tie ZAC des Quatre Chemins 85400 Sainte Gemme La Plaine France Simpson Strong-Tie Winchester Road Cardinal Point Tamworth Staffordshire B78 3HG United Kingdom
This European Technical Approval contains:	73 pages including 6 annexes which form an integral part of the document

Revision history table

Modifications and adding to the previous ETA-06/0270 valid from 2008-02-26 to 2013-02-26	
Pages	Update
Page 16	BSD – Modification of the drawing
Page 17	BSDI – Modification of the drawing
Page 20 and 21	SAE590, SAE620-a and SAE620-b have been added
Page 32	SDED/G have been added
Page 34	SDED/G – new formula for downward direction,
Page 35	SDED/G – new formula for upward direction
Page 36	SDED/G – new formula for lateral direction
Page 37	SBE and SBG – Axial force added
Page 41	SBE – the model of calculation for the SBG is used.
Page 41 and 71	Square washer 30x30x3 has been deleted and replaced by standard washer Ø18 min
	AI and A joist hanger have been deleted
	New model of calculation for concrete application (excepted for SBE, SBG)

Modifications and adding to the previous ETA-06/0270 valid from 2009-01-13 to 2014-01-13	
Pages	Update
Page 4	Modification of the text about the material
Page 15	BSD/I – Insertion of new blank model in the first two tables
Page 16 and 17	BSD/I – Modification of the drawing
Page 31	SBG – Modification of the minimum width of SBG in the two tables
Page48	BSD/I – Modification of the 4 tables
Page 64	SBG – Correction of the value of kh,2 and insertion of a line for 38mm (Full Nailing)
Page 65	SBG – Correction of the value of kh,2 and insertion of a line for 38mm (Partial Nailing)
Page 67	BSD/I – Modification of the table
Page 69	BSD/I – Modification of the table.

I LEGAL BASIS AND GENERAL CONDITIONS

1 This European Technical Approval is issued by ETA-Danmark A/S in accordance with:

- Council Directive 89/106/EEC of 21 December 1988 on the approximation of laws, regulations and administrative provisions of Member States relating to construction products[1)], as amended by Council Directive 93/68/EEC of 22 July 1993[2)].

- Bekendtgørelse 559 af 27-06-1994 (afløser bekendtgørelse 480 af 25-06-1991) om ikrafttræden af EF direktiv af 21. december 1988 om indbyrdes tilnærmelse af medlemsstaternes love og administrative bestemmelser om byggevarer.

- Common Procedural Rules for Requesting, Preparing and the Granting of European Technical Approvals set out in the Annex to Commission Decision 94/23/EC[3)].

- EOTA Guideline ETAG 015 *Three-dimensional nailing plates*, September 2002 edition.

2 ETA-Danmark A/S is authorized to check whether the provisions of this European Technical Approval are met. Checking may take place in the manufacturing plant. Nevertheless, the responsibility for the conformity of the products to the European Technical Approval and for their fitness for the intended use remains with the holder of the European Technical Approval.

3 This European Technical Approval is not to be transferred to manufacturers or agents of manufacturers other than those indicated on page 1, or manufacturing plants other than those indicated on page 1 of this European Technical Approval.

4 This European Technical Approval may be withdrawn by ETA-Danmark A/S pursuant to Article 5(1) of Council Directive89/106/EEC.

5 Reproduction of this European Technical Approval including transmission by electronic means shall be in full. However, partial reproduction can be made with the written consent of ETA-Danmark A/S. In this case partial reproduction has to be designated as such. Texts and drawings of advertising brochures shall not contradict or misuse the European Technical Approval.

6 This European Technical Approval is issued by ETA-Danmark A/S in English.
This version corresponds fully to the version circulated within EOTA. Translations into other languages have to be designated as such.

1) Official Journal of the European Communities N° L40, 11 Feb 1989, p 12.
2) Official Journal of the European Communities N° L220, 30 Aug 1993, p 1.
3) Official Journal of the European Communities N° L 17, 20 Jan 1994, p 34.

II SPECIAL CONDITIONS OF THE EUROPEAN TECHNICAL APPROVAL

1 Definition of product and intended use

Definition of the product
Simpson Strong-Tie joist hanger type SBE, SBG, Standard, BSD, SAE, SAEL and SAIX are one-piece non-welded, face-fixed external flanges joist hangers to be used in timber to timber connections as well as connections between a timber joist and a concrete structure or a steel member.

Simpson Strong-Tie joist hanger type I, BSDI, SAI, SAIL and SAIX are one-piece non-welded, face-fixed, internal flanges joist hangers to be used in timber to timber connections.

Simpson Strong-Tie joist hanger type SDED and SDEG are two-pieces non-welded, face-fixed external flanges joist hanger to be used in timber to timber connections as well as connection between a timber and a concrete structure or a steel member.

The joist hangers are made from pre-galvanized steel Grade S250GD + Z (min Z275) according to EN 10346 with tolerances according to EN10143. The joist hangers can also be produced from stainless steel number 1.4401 or number 1.4404 according to EN 10088-2 with a minimum characteristic 0.2% yield stress of 240 MPa, a minimum 1.0% yield stress of 270 MPa and a minimum ultimate tensile strength of 530 MPa. Dimensions, hole positions, steel type and typical installations are shown in Annex A.

Intended use
The joist hangers are intended for use in making end-grain to side-grain connections in load bearing timber structures, as a connection between a wood based joist and a solid timber or wood based header, where requirements for mechanical resistance and stability and safety in use in the sense of the Essential Requirements 1 and 4 of Council Directive 89/106/EEC shall be fulfilled. They are also intended for use in making an end-grain connection between a timber joist and a concrete structure or a steel member.

The joist hangers can be installed as connections between wood based members such as:

- Structural solid timber classified to C14-C40 according to EN 338 / EN 14081,
- Glulam classified to GL24-GL36 according to EN 1194 / EN 14080,
- LVL according to EN 14374,
- Parallam PSL,
- Intrallam LSL,
- Duo- and Triobalken,
- Layered wood plates,
- Kreuzbalken with minimum thickness of 80 mm
- I-beams with backer blocks on both sides of the web in the header and web stiffeners in the joist
- Plywood according to EN 636

However, the calculation methods are only allowed for a characteristic wood density of up to 460 kg/m^3. Even though the wood based material may have a larger density, this must not be used in the formulas for the load-carrying capacities of the fasteners.

Annex B states the formulas for the characteristic load-carrying capacities of the joist hanger connections.
The design of the connections shall be in accordance with Eurocode 5 or a similar national Timber Code.

It is assumed that the forces acting on the joist hanger connection are the following F_{up}, F_{down} and F_{lat}, as shown in the figure below. The forces F_{up} and F_{down} shall act in the middle of the joist hanger. The force F_{lat} is assumed to act $e_{J,F}$ above the centre of gravity of the nails in the joist. It is assumed that the forces are acting right at the end of the joist.

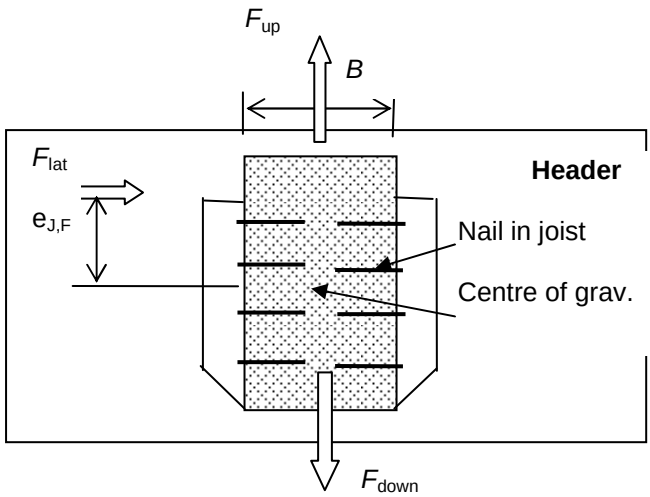

It is assumed that the header is prevented from rotating. Similar it is assumed that the concrete structure or the steel member to which the joist hanger is bolted does not rotate. If the header beam only has installed a joist hanger on one side the eccentricity moment $M_v = F_d \cdot (B_H / 2 + 30mm)$ shall be considered. The same applies when the header has joist hanger connections on both sides, but with vertical forces which differ more than 20%.

It is a condition for a force F_{lat} perpendicular to the vertical symmetry line that the joist hanger is connected to a wood-based header with nails or screws in all holes.

The joist hangers are intended for use for connections subject to static or quasi static loading.

The zinc-coated hangers are for use in timber structures subject to dry, internal conditions defined by the service classes 1 and 2 of EN 1995-1-1:2004, (Eurocode 5).

The joist hangers made from stainless steel are intended for use in outdoor conditions defined by the service classes 3 of EN 1995-1-1:2004, (Eurocode 5). The fasteners (nails, screws and bolts) to be used shall be made from suitable stainless material.

Assumed working life

The assumed intended working life of the joist hangers for the intended use is 50 years, provided that they are subject to appropriate use and maintenance.

The information on the working life should not be regarded as a guarantee provided by the manufacturer or ETA-Danmark A/S. An “assumed intended working life” means that it is expected that, when this working life has elapsed, the real working life may be, in normal use conditions, considerably longer without major degradation affecting the essential requirements.

2 Characteristics of product and assessment

ETAG para.	Characteristic		Assessment of characteristic
	2.1	**Mechanical resistance and stability*)**	
6.1.1		Characteristic load-carrying capacity	See Annex B
6.1.2		Stiffness	No performance determined
6.1.3		Ductility in cyclic testing	No performance determined
	2.2	**Safety in case of fire**	
6.2.1		Reaction to fire	The joist hangers are made from steel classified as **Euroclass A1** in accordance with EN 13501-1 and EC decision 96/603/EC, amended by EC Decision 2000/605/EC
	2.3	**Hygiene, health and the environment**	
6.3.1		Influence on air quality	No dangerous materials **)
	2.4	**Safety in use**	Not relevant
	2.5	**Protection against noise**	Not relevant
	2.6	**Energy economy and heat retention**	Not relevant
	2.7	**Related aspects of serviceability**	
6.7.1		Durability	The joist hangers have been assessed as having satisfactory durability and serviceability when used in timber structures using the timber species described in Eurocode 5 and subject to the conditions defined by service class 1, 2 and 3
6.7.2		Serviceability	
6.7.3		Identification	See Annex A

*) See page 5 of this ETA

**) In accordance with http://europa.eu.int-/comm/enterprise/construction/internal/dangsub/dangmain.htm In addition to the specific clauses relating to dangerous substances contained in this European Technical Approval, there may be other requirements applicable to the products falling within its scope (e.g. transposed European legislation and national laws, regulations and administrative provisions). In order to meet the provisions of the EU Construction Products Directive, these requirements need also to be complied with, when and where they apply.

Safety principles and partial factors

2.1 Mechanical resistance and stability

See annex B for characteristic load-carrying capacities of the joist hangers.

The characteristic capacities of the joist hangers are determined by calculation assisted by testing as described in the EOTA Guideline 015 clause 5.1.2. They should be used for designs in accordance with Eurocode 5 or a similar national Timber Code.

The design models allow the use of fasteners described in the table on page 27 in Annex A:

Connector nails and screws in accordance to ETA-04/0013. The version used has to be at least from 2008-08-13 to 2013-08-13 or most recent.
In the formulas in Annex B the capacities for connector nails and connector screws in accordance to ETA-04/0013 are used. For the SBG and the SBE, the capacities for connector nails in accordance with EN14592 are used. The capacity will be calculated in accordance with the Eurocode 5 assuming a thick steel plate.

Threaded nails (ring shank nails) in accordance to EN 14592
In the formulas in Annex B the capacities for threaded nails calculated from the formulas of Eurocode 5 are used assuming a thick steel plate when calculating the lateral nail load bearing capacity.

Square Twist nails in accordance to EN 14592
In the formulas in Annex B the capacities for square twist nails calculated from the formulas of Eurocode 5 are used assuming a thick steel plate when calculating the lateral nail load bearing capacity.

Round smooth nails in accordance to EN 14592
In the formulas in Annex B the capacities for round smooth nails calculated from the formulas of Eurocode 5 are used assuming a thin steel plate when calculating the lateral load bearing capacity.

Further, the joist hangers can be fastened to a concrete structure or steel member by bolts with a diameter of 8 mm, 10 mm or 12 mm in holes with a diameter up to 2 mm larger than the bolt.

No performance has been determined in relation to ductility of a joint under cyclic testing. The contribution to the performance of structures in seismic zones, therefore, has not been assessed.

No performance has been determined in relation to the joint's stiffness properties - to be used for the analysis of the serviceability limit state.

2.7 Related aspects of serviceability

2.7.1 Corrosion protection in service class 1 and 2.
In accordance with ETAG 015 the joist hanger have a zinc coating weight of min Z275. The steel employed is S250 GD with min Z275 according to EN 10326:2004.

2.7.2 Corrosion protection in service class 3.
In accordance with Eurocode 5 the joist hangers are made from stainless steel 1.4401 and/or 1.4404 according to EN 10088 and the nails or screws shall be produced from stainless steel.

3 Attestation of Conformity and CE marking

3.1 Attestation of Conformity system

The system of attestation of conformity is 2+ described in Council Directive 89/106/EEC (Construction Products Directive) Annex III.

a) Tasks for the manufacturer:

(1) Factory production control,
(2) Initial type testing of the product,

b) Tasks for the notified body:

(1) Initial inspection of the factory and the factory production control,
(2) Continuous surveillance

3.2 Responsibilities

3.2.1 Tasks of the manufacturer

3.2.1.1 Factory production control

The manufacturer has a factory production control system in the plant and exercises permanent internal control of production. All the elements, requirements and provisions adopted by the manufacturer are documented in a systematic manner in the form of written policies and procedures. This production control system ensures that the product is in conformity with the European Technical Approval.

The manufacturer shall only use raw materials supplied with the relevant inspection documents as laid down in the control plan[1]. The incoming raw materials shall be subject to controls and tests by the manufacturer before acceptance. Check of materials, such as sheet metal, shall include control of the inspection documents presented by suppliers (comparison with nominal values) by verifying dimension and determining material properties, e.g. chemical composition, mechanical properties and zinc coating thickness.

The manufactured components are checked visually and for dimensions.

The control plan, which is part of the technical documentation of this European Technical Approval, includes details of the extent, nature and frequency of testing and controls to be performed within the factory production control and has been agreed between the approval holder and ETA-Danmark A/S.

The results of factory production control are recorded and evaluated. The records include at least the following information:

- Designation of the product, basic material and components;
- Type of control or testing;
- Date of manufacture of the product and date of testing of the product or basic material and components;
- Result of control and testing and, if appropriate, comparison with requirements;
- Signature of person responsible for factory production control.

The records shall be presented to ETA-Danmark A/S on request

3.2.1.1 Initial type testing of the product

For initial type-testing the results of the tests performed as part of the assessment for the European Technical Approval shall be used unless there are changes in the production line or plant. In such cases the necessary initial type testing has to be agreed between ETA-Danmark A/S and the notified body

3.2.2. Tasks of notified bodies

3.2.2.1 Initial inspection of the factory and the factory production control

The approved body should ascertain that, in accordance with the control plan, the factory, in particular the staff and equipment, and the factory production control, are suitable to ensure a continuous and orderly manufacturing of the joist hangers with the specifications given in part 2.

3.2.2.2 Continuous surveillance

The approved body shall visit the factory at least twice a year for routine inspections. It shall be verified that the system of factory production control and the specified manufacturing processes are maintained, taking account of the control plan.

The results of product certification and continuous surveillance shall be made available on demand by the certification body to ETA-Danmark A/S. Where the provisions of the European Technical Approval and the control plan are no longer fulfilled, the

1 The control plan has been deposited at the ETA-Danmark A/S and is only made available to the approved bodies involved in the conformity attestation procedure.

certificate of conformity shall be withdrawn by the approved body.

3.3 CE marking

The CE marking shall be affixed on each packaging of joist hangers. The initials "CE" shall be followed by the identification number of the notified body and shall be accompanied by the following information:

- Name or identifying mark of the manufacturer
- The last two digits of the year in which the marking was affixed
- Number of the European Technical Approval
- Name and size of product
- Number of the ETA Guideline (ETAG no. 015)
- Number of the EC Certificate of Conformity

4 Assumptions under which the fitness of the product for the intended use was favourably assessed

4.1 Manufacturing

Simpson Strong-Tie joist hangers types SBE, SBG, SDED/G, Standard, I, BSD, BSDI, SAE, SAI, SAEL, SAIL and SAIX are manufactured in accordance with the provisions of this European Technical Approval using the manufacturing processes as identified in the inspection of the plant by the notified inspection body and laid down in the technical documentation.

4.2 Installation

Joist hanger connections

A joist hanger connection is deemed fit for its intended use provided:

Header – support conditions

- The header shall be restrained against rotation and be free from wane under the joist hanger.

  If the header carries joists only on one side the eccentricity moment from the joists $M_{ec} = R_{joist}$ ($b_{header}/2+e_{nail}$) shall be considered at the strength verification of the header.

R_{joist}	Reaction force from the joists
b_{header}	Width of header
e_{nail}	Distance from nails in the joist to the of the header

- For a header with joists from both sides but with different reaction forces a similar consideration applies.

Wood to wood connections

- Joist hangers can be fastened to wood-based members by nails or screws.
- There shall be nails or screws in all holes or a partial nailing pattern as prescribed in Annex B-E can be used.
- The characteristic capacity of the joist hanger connection is calculated according to the manufacturer's technical documentation, dated 2006-06-24.
- The joist hanger connection is designed in accordance with Eurocode 5 or an appropriate national code.
- The gap between the end of the joist and the surface, where contact stresses can occur during loading shall be limited. This means that for joist hangers with outward flaps shall the gap between the surface of the end of the joist and that of the header be maximum 3 mm.
  Joist hangers with inward flaps shall the gap between the surface of the nail heads in the inward flaps and the end of the joist be maximum 8 mm.
- For joist hanger Standard, BSD, I, BSDI and SBG the width of the joist shall be at least l+4d, where l is the length of the nails and d is the diameter of the nails in the joist, for full nailing and partial nailing without staggering the nails in the joist. For partial nailing with staggered nails in the joist the width shall be at least the penetration length of the nails.
  For joist hanger SAE, SAEL, SBE, SAIL SAIX and SDED/G the width of the joist shall be at least the penetration length of the nails.
- The cross section of the joist at the joist hanger connection shall have sharp edges at the lower side against the bottom plate, i.e. it shall be without wane.
- The cross section of the header shall have a plane surface against the whole joist hanger.
- The width B_J of the joist shall correspond to that of the joist hanger. B_J shall not be smaller than B-3 mm, where B is the inner width of the joist hanger.
- The depth of the joist shall be so large that the top of the joist is at least 20 mm above the upper nail in the joist.
- Joist hangers made from stainless steel should only be fastened with fasteners made from suitable stainless steel. Zinc-coated joist hangers shall not be fastened with fasteners of stainless steel.
- Nails or screws to be used shall have a diameter, which fits the holes of the joist hangers. Round nails shall have a diameter which is not smaller than the diameter of the hole minus 1 mm. Nails with square cross section shall have a side length not smaller than the hole diameter minus 1,25 mm.

Wood to concrete or steel

The above mentioned rules for wood to wood connections are applicable also for the connection between the joist and the joist hanger.

- The joist hanger shall be in close contact with the concrete or steel over the whole face. There shall be no intermediate layers in between.
- The gap between the end of the joist and the surface, where contact stresses can occur during loading shall be limited. This means that the gap between the surface of the end of the joist and that of the concrete or steel shall be maximum 3 mm.
- The bolt shall have a diameter not less than the hole diameter minus 2 mm.
- The bolts shall be placed symmetrically about the vertical symmetry line. There shall always be bolts in the 2 upper holes.
- For concrete, the bolts shall use washers recommended with the mechanical anchor delivery by the suppliers. For steel, the upper bolts shall have washer Ø18 mm minimum.

4.3 Maintenance and repair

Maintenance is not required during the assumed intended working life.
Should repair prove necessary, it is normal to replace the joist hanger.

Thomas Bruun
Manager, ETA-Danmark A/S

Annex A
Product details and definitions

Joist hanger type Standard
Face mount hanger with external flanges

2.0 mm thick pre-galvanised steel S250GD + Z (min Z275) according to EN 10326:2004 with tolerances according to EN 10143:1993

2.0 mm thick Stainless steel: 1.4401 and/or 1.4404 according to EN 10088:1997

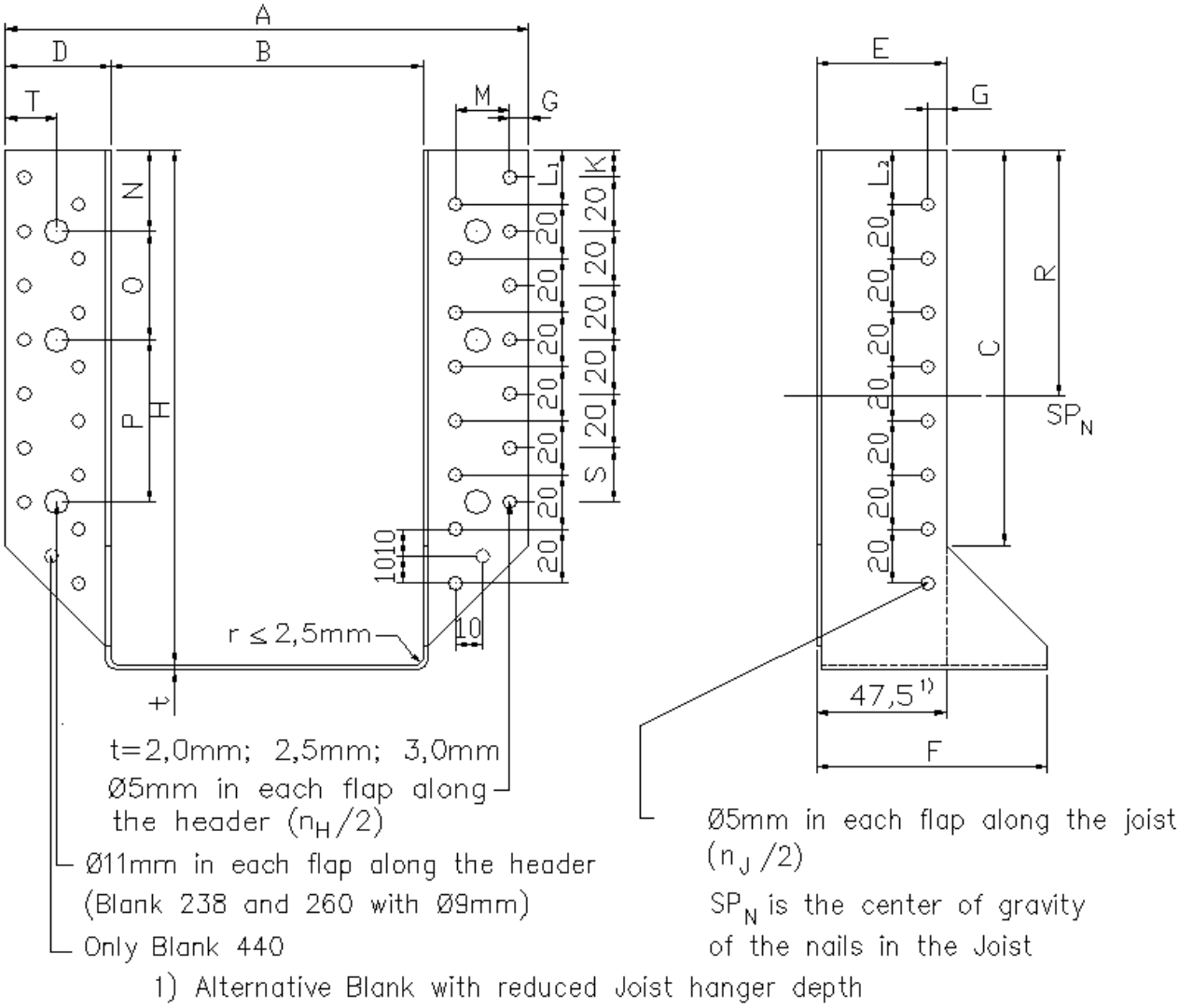

Blank form

Blank	B	C	D	E	F	G	K	L_1	L_2	M	N	O	P	T	S	R
238	34- 60	54	37.5	37	72.5	7.5	16.5	6.5	6.5	17.5	26.5			13.5	15	36.5
260	34- 64	65	37.5	37	72.5	7.5	7.5	17.5	17.5	20	27.5	40		20	15	57.5
280	100	55	40	42	80	7,5	7,5	17,5	7,5	20	37,5			20	15	37,5
320	34- 80	85.5	40	42	80	7.5	7.5	17.5	17.5	20	27.5	40		20	15	57.5
358	120	76,5	42	47	87	7,5	9	19	9	20	19	40		20	20	49
380	34-101	105	40	42	80	7.5	7.5	17.5	17.5	20	27.5	40		20	15	57.5
380	127	105	40	42	80	7,5	7,5	17,5	17,5	20	27,5	60		20	15	67,5
418	140	105,5	39	47,5	84,5	7,5	9	19	19	20	29	60		20	20	69
440	34-120	115	42	47	87	7.5	17.5	7.5	7.5	20	17.5	40	40	20	20	67.5
440	150	115	42	47	87	7,5	7,5	17,5	7,5	20	17,5	40	40	20	20	67,5
500	34-140	146.5	39	47.5	84.5	7.5	10	20	20	20	30	40	60	20	20	67.5
Permitted deviation		±2.0	±1.0	±1.0	±1.0	±1.0	±1.0	±1.0	±1.0	±0.2	±1.0	±0.2	±0.2	±1.0	±0.2	

Blank	Total n° of holes		Width		Height		A
	n_H	n_J	mm		mm		
238	14	8	34	60	89	102	= B + 75
260	16	8	34	64	98	113	= B + 75
280	14	8	100		90		180
320	20	10	34	80	120	143	= B + 80
358	18	10	120		119		204
380	24	12	34	101	139.5	173	= B + 80
380	22	6	127		126,5		207
418	22	12	140		139		218
440	26	14	34	120	157.5	200.5	= B + 84
440	26	14	150		142,5		234
500	30	16	34	140	180	233	= B + 78

Joist hanger's height = (blank – width)/2

Joist hanger type I
Face mount hanger with interior flanges

2.0 mm thick pre-galvanised steel S250GD + Z (min Z275) according to EN 10326:2004 with tolerances according to EN 10143:1993

2.0 mm thick Stainless steel: 1.4401 and/or 1.4404 according to EN 10088:1997

1st blank form

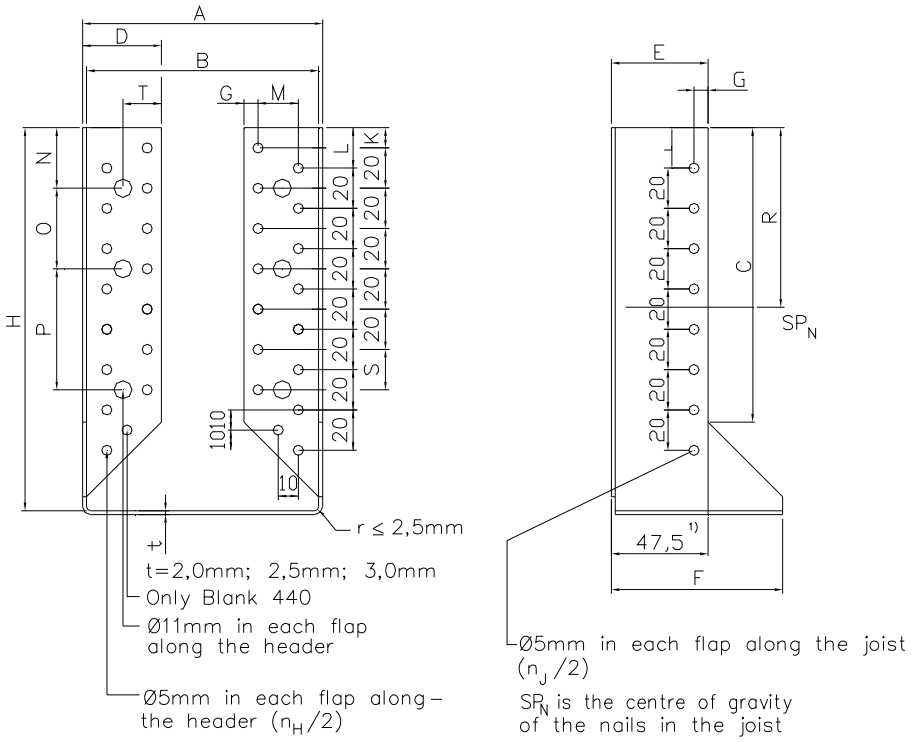

1) Alternative Blank with reduced Joist hanger depth

2nd blank form

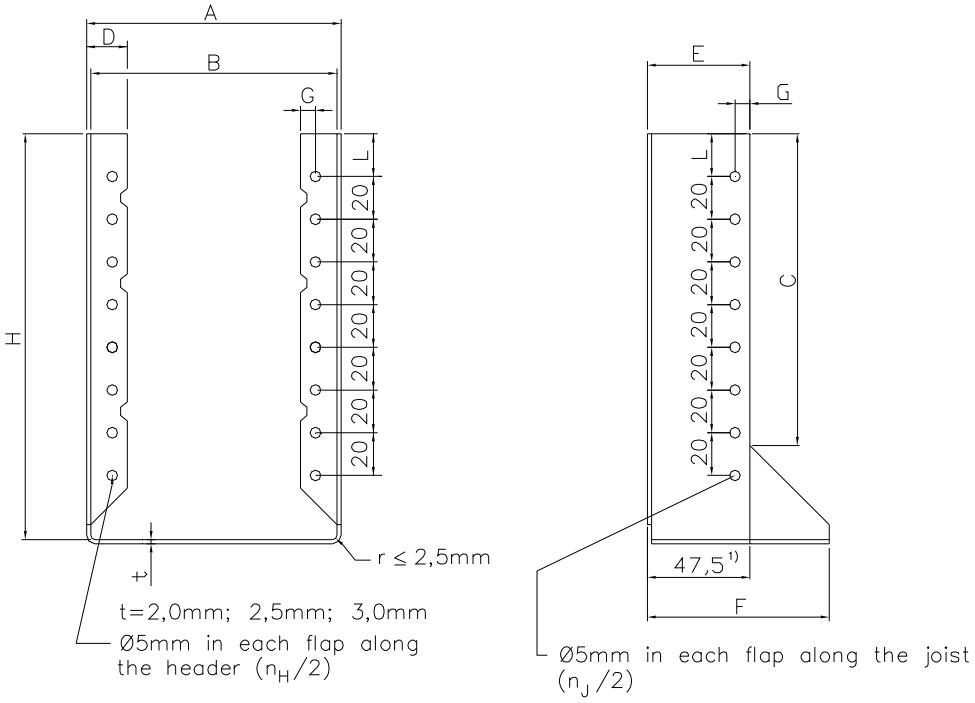

1) Alternative Blank with reduced Joist hanger depth

1st blank form

Blank	B Min - max	C	D	E	F	G	K	L	M	N	O	P	T	S
280	100	55	40	42.5	80	7.5	7.5	17.5	20	37.5	-	-	20	15
320	76 – 80	85.5	40	42	80	7.5	7.5	17.5	20	27.5	40	-	20	15
358	120	77	42	47	87	7.5	9	19	20	19	40	-	20	20
380	76 – 101	105	40	42	80	7.5	7.5	17.5	20	27.5	60	-	20	15
418	140	105	39	47.5	84.5	7.5	9	19	20	29	60	-	20	20
440	80 – 120	115	42	47	87	7.5	17.5	7.5	20	27.5	40	40	20	20
500	74 - 140	146.5	39	47.5	84.5	7.5	10	20	20	17.5	40	60	20	20

Blank	Total n° of nails		Width interval		Height interval		A
	n_H	n_J	min	max	min	max	
280	14	8	100		90		= B + 4
320	20	10	76	80	120	122	= B + 4
358	18	10	120		119		= B + 4
380	24	12	76	101	139.5	152	= B + 4
418	22	12	140		139		= B + 4
440	26	14	80	120	157.5	177.5	= B + 4
500	30	16	74	140	180	213	= B + 4

2nd blank form

Blank	B Min - max	C	D	E	F	G	L	T
238 I	38 – 60	71	20	37.5	55.5	7.5	7.5	20
260 I	38 – 64	82	20	37.5	55.5	7.5	18.5	20
320 I	38 – 81	102	20	42.5	60.5	7.5	17.5	20
380 I	38 – 101	122	20	42.5	60.5	7.5	17.5	20
440 I	38 – 120	115	22	47	87	7.5	7.5	20
500 I	38 – 140	146.5	19	47.5	84.5	7.5	20	20
Permitted deviation		±2.0	±1.0	±1.0	±1.0	±1.0	±1.0	±1.0

Blank	Total n° of nails		Width interval		Height interval		A
	n_H	n_J	min	max	min	max	
238 I	8	4	38	60	89	100	= B + 4
260 I	8	4	38	64	98	111	= B + 4
320 I	10	10	38	81	119.5	141	= B + 4
380 I	12	12	38	101	139.5	171	= B + 4
440 I	14	14	38	120	160	201	= B + 4
500 I	16	16	38	140	180	231	= B + 4

Joist hanger's height = (blank – width)/2

Joist hanger type BSD

Face mount hanger with external flanges in pre-galvanized steel or stainless steel.
Optional bolt holes up to Ø13 are possible for bolts. It is allowed to remove all the Ø5 mm holes on the header flanges when bolt holes are added. More holes up to Ø13 are allowed between the 2 holes shown on each flange; the 16 mm edge distance can't not be changed.

50 mm ≤ Width ≤ 250 mm Height H ≤ 320 mm

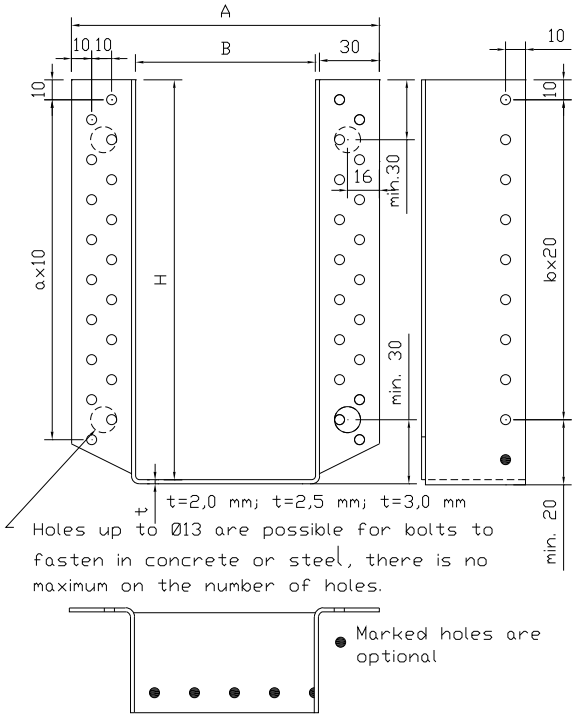

34 mm ≤ Width ≤ 79 mm Height H ≤ 320 mm

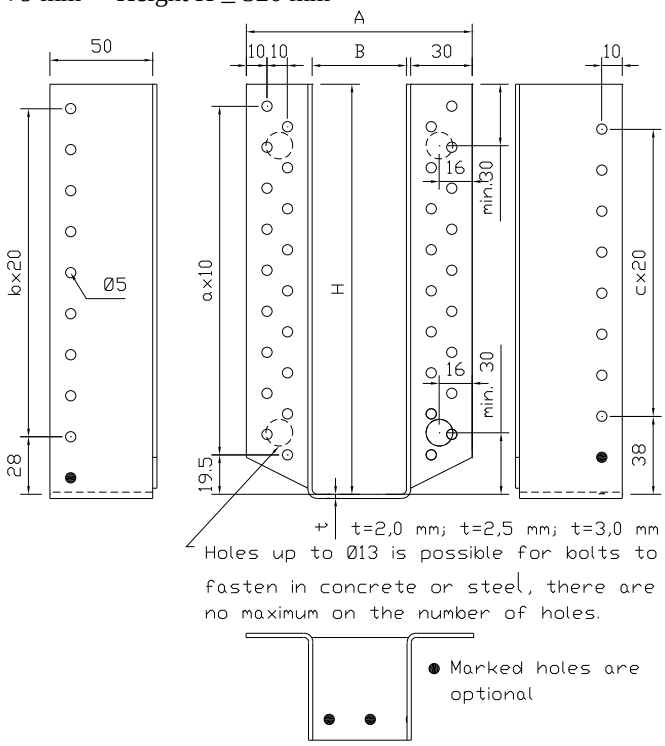

Joist hanger type BSDI

Face mount hanger with interior flanges in pre-galvanized steel or stainless steel.

80 mm ≤ width ≤ 250 mm Height H ≤ 320 mm

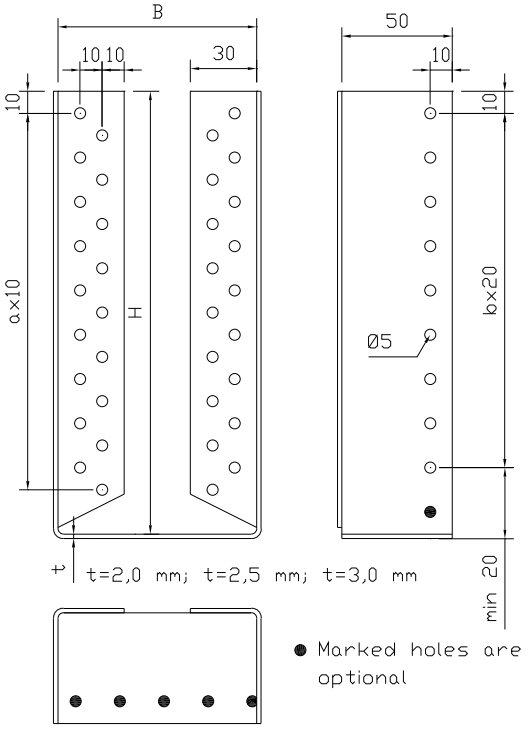

60 mm ≤ width ≤ 79 mm
Height H ≤ 320 mm

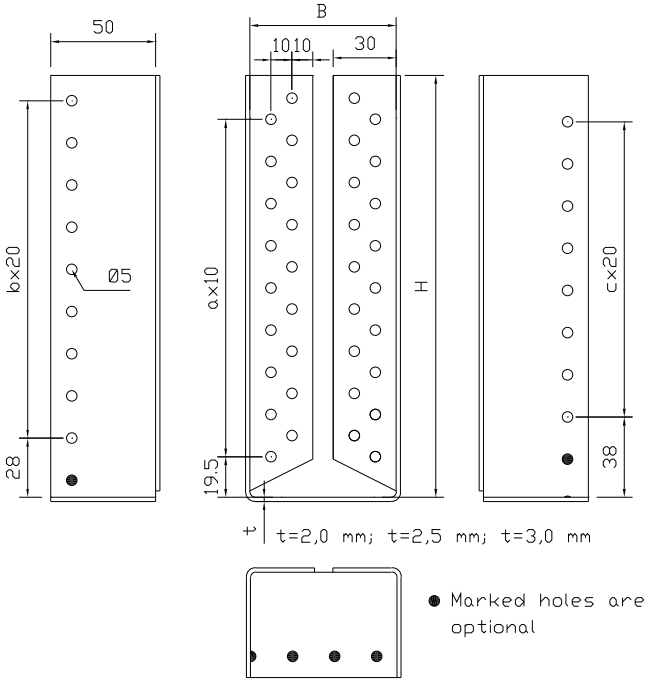

34 mm ≤ width ≤ 59 mm
Height H ≤ 320 mm

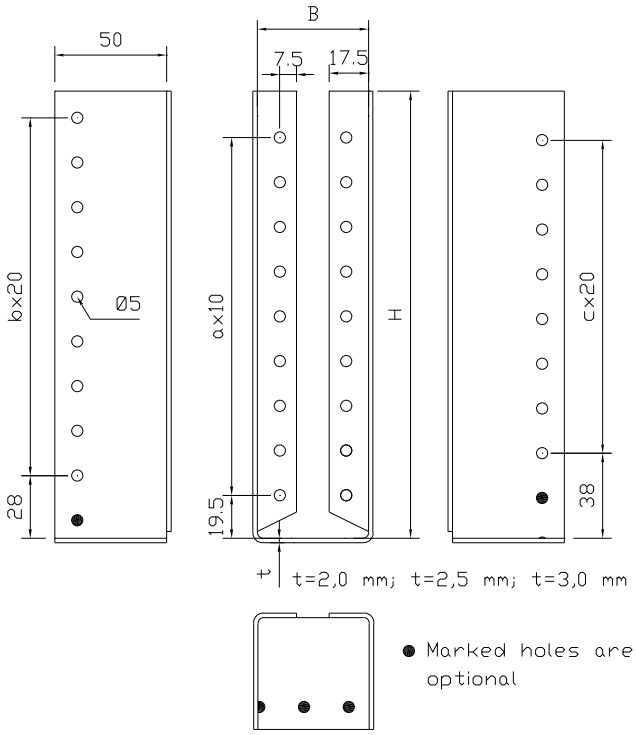

Joist hanger type SAE

Face mount hanger with external flanges

2.0 mm thick pre-galvanized steel S250GD + Z (min Z275) according to EN 10326:2004 with tolerances according to EN 10143:1993

2.0 mm thick Stainless steel: 1.4401 and/or 1.4404 according to EN 10088:1997

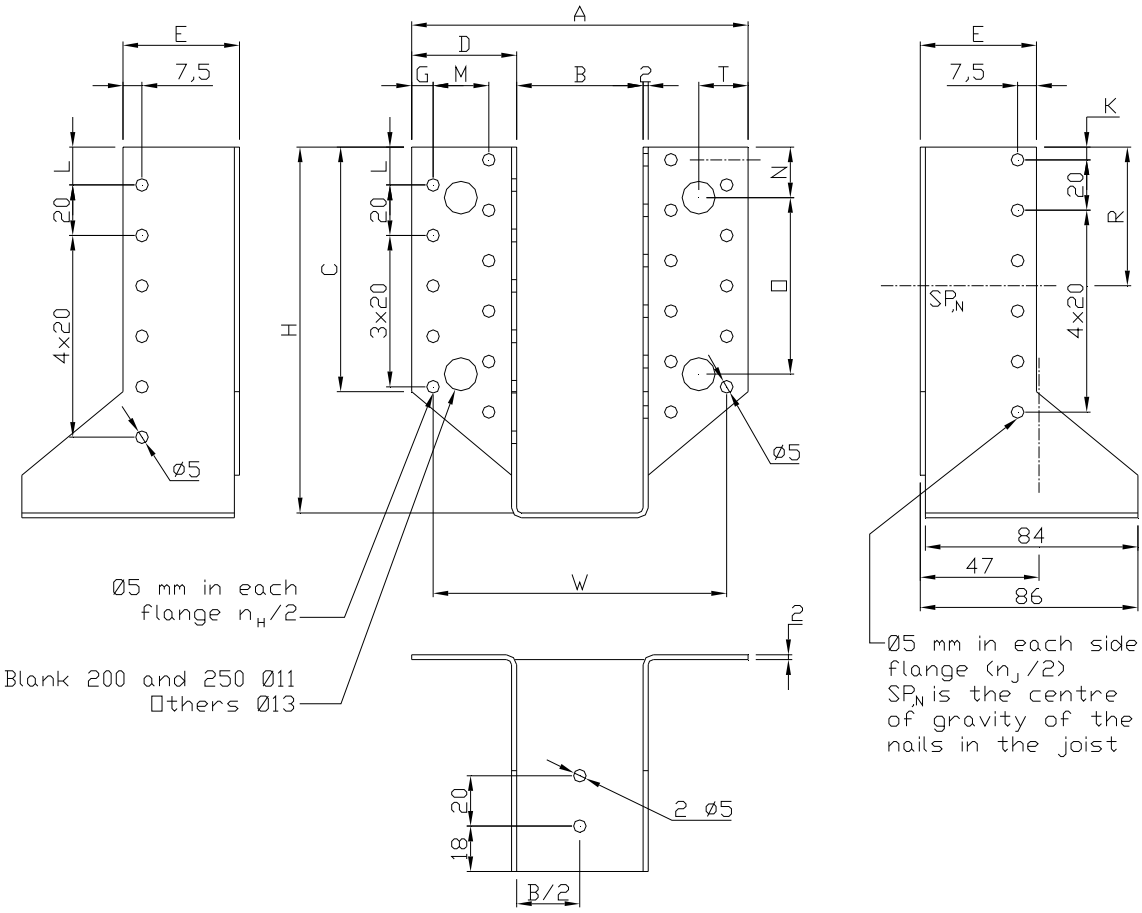

Blank	B min-max	C	D	E	G	K	L	M	N	O	R	T
200	24-80	27	41.5	46	8.5	5	15	22	20	--	20	19.5
250	24-80	52	41.5	46	8.5	10	20	22	25	--	35	19.5
300	24-70	77	41.5	46	8.5	5	15	22	20	50	45	19.5
340	24-70	97	41.5	46	8.5	5	15	22	20	70	55	19.5
380	24-110	97	41.5	46	8.5	5	15	22	20	70	55	19.5
440	24-110	127	41.5	46	8.5	5	15	22	20	100	70	19.5
500	24-110	157	41.5	46	8.5	5	15	22	20	60-70	85	19.5
Permitted deviation		+2 -0	±1.0	±1.0	±1.0	±1.0	±1.0	±0.2	±1.0-	±0.2	-	±1.0

Blank	Total n° of nails		Width interval		Height interval		A
	n_H	n_J	min	max	min	max	
200	8	5	24	80	60	88	= B + 83
250	12	7	24	80	85	113	= B + 83
300	18	10	24	70	115	138	= B + 83
340	22	12	24	70	135	158	= B + 83
380	22	12	24	110	135	178	= B + 83
440	28	15	24	110	165	208	= B + 83
500	34	18	24	110	195	238	= B + 83

Table Notes:

- SAE200 to SAE500 are manufactured from a standard blank length, therefore the height will vary depending on hanger width.
- Joist hanger's height = (blank – width)/2

Joist hanger type SAE250/38/1,5

Face mount hanger with external flanges

1.5 mm thick pre-galvanized steel S250GD + Z (min Z275) according to EN 10326:2004 with tolerances according to EN 10143:1993

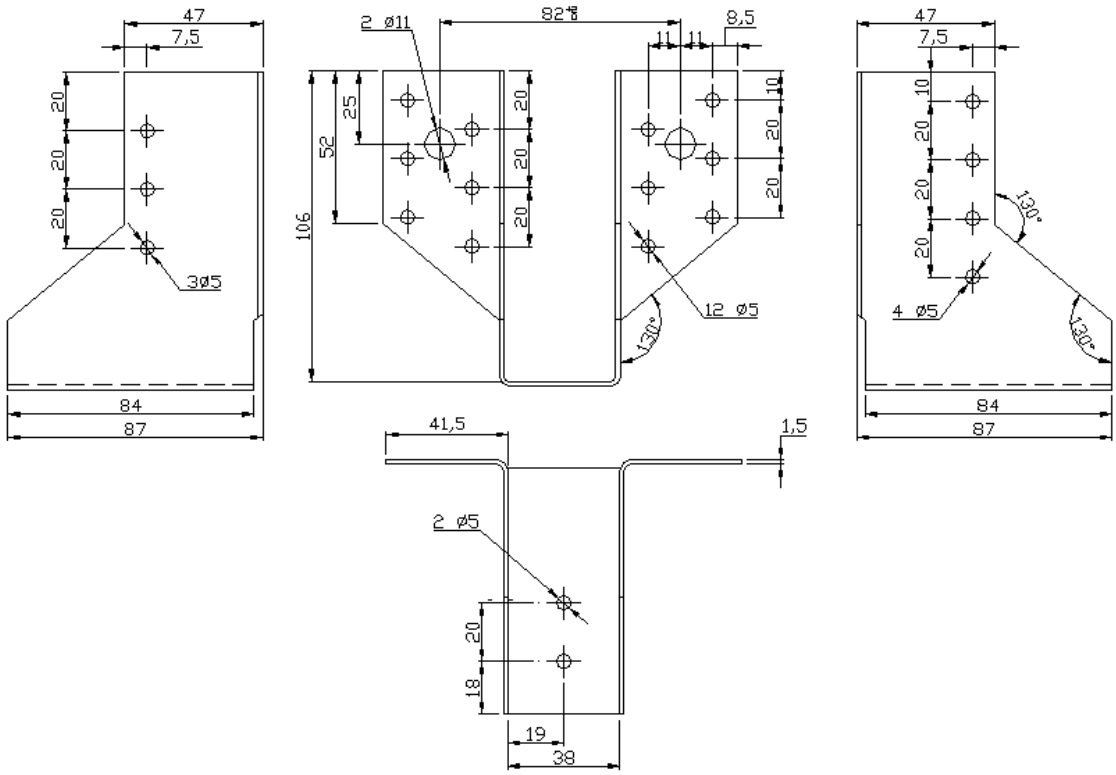

Characteristic values for a connection timber/timber with fasteners in accordance with the ETA-04/0013

Timber Grade			C14	C16	C18	C20	C22	C24
Characteristic Density (kg/m3)			290	310	320	330	340	350
SAE250/358/1,5	F_k EN 14358	Downward	11,00	12,57	13,39	14,24	15,12	16,02
		Uplift	4,50	5,14	5,48	5,83	6,19	6,55
		Lateral	6,29	7,19	7,66	8,14	8,65	9,16

Joist hanger type SAE590 and SAE620

Face mount hanger with external flanges

1.5 mm thick pre-galvanized steel S250GD + Z (min Z275) according to EN 10326:2004 with tolerances according to EN 10143:1993.

SAE590

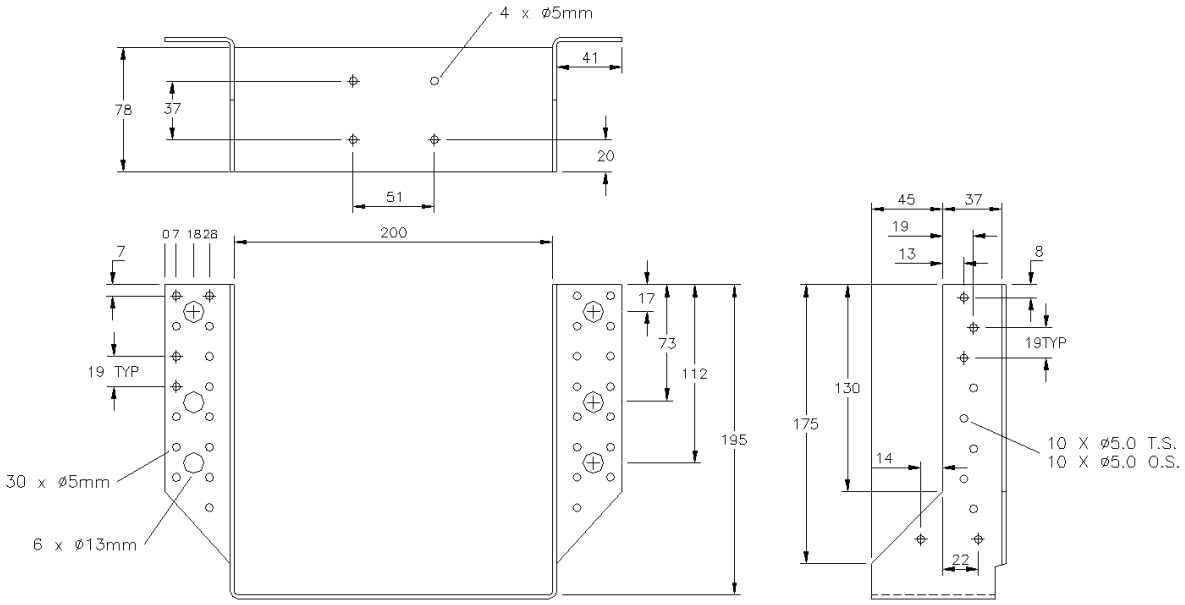

SAE620-a

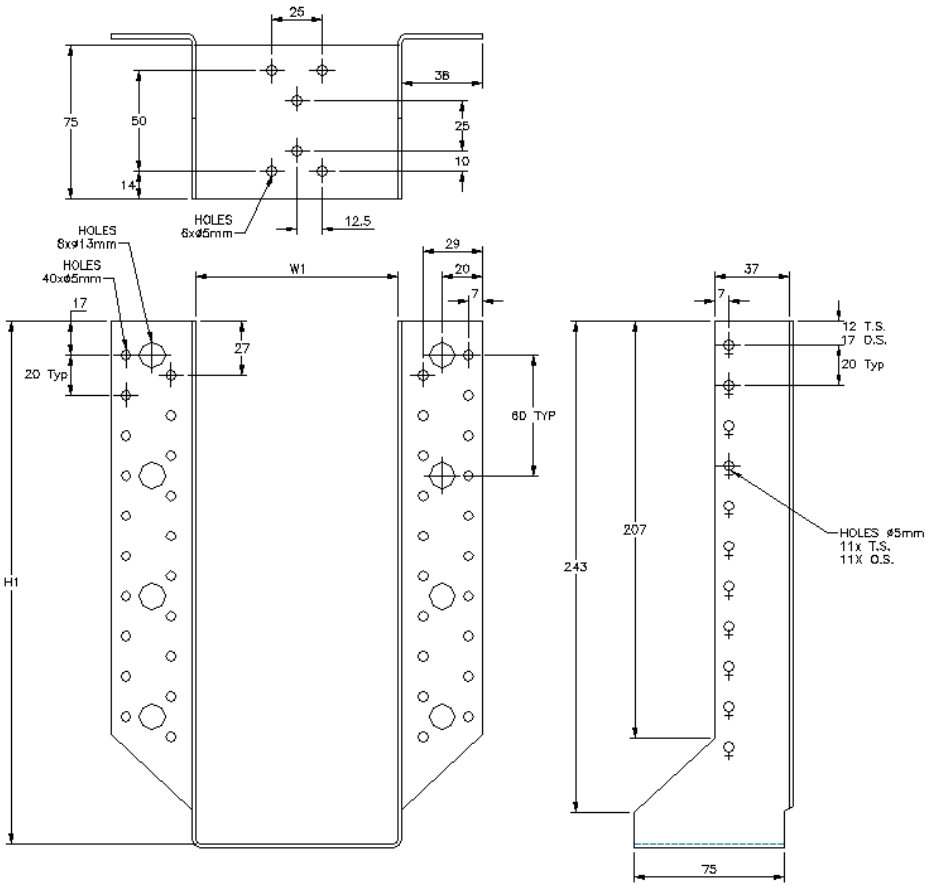

SAE620-b

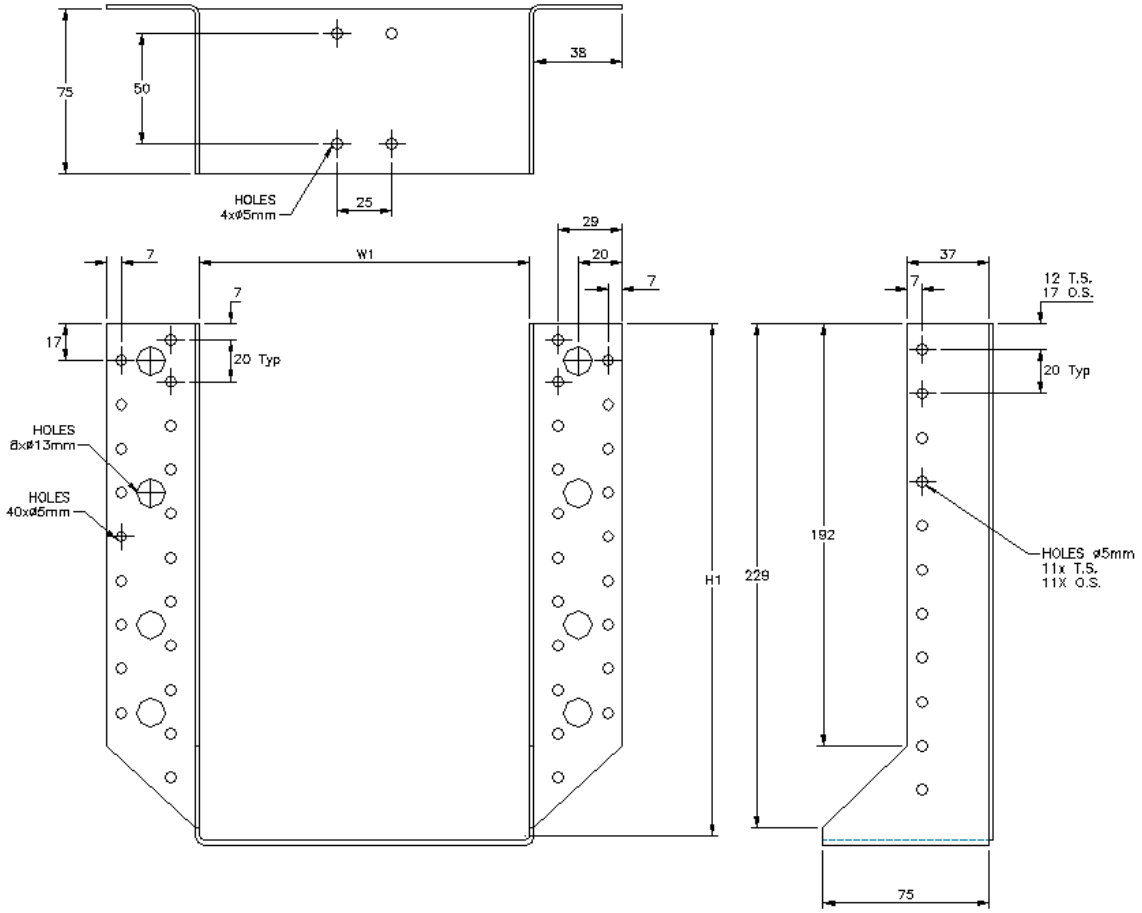

Blank	Total n° of nails		Width interval		Height interval		A
	n_H	n_J	min	max	min	max	
590	30	20	200	200	195	195	= B + 83
620-a	40	22	38	100	260	291	= B + 83
620-b	40	22	101	125	247.5	259.5	= B + 83

Table Notes:

- SAE590 to SAE620 are manufactured from a standard blank length, therefore the height will vary depending on hanger width.
- Joist hanger's height = (blank – width)/2

Joist hanger type SAIX

Face mount hanger with external or internal flanges
1.5 mm thick Stainless steel: 1.4401 and/or 1.4404 according to EN 10088:1997

1.5 mm thick pre-galvanized steel S250GD + Z (min Z275) according to EN 10326:2004 with tolerances according to EN 10143:1993

1st blank model

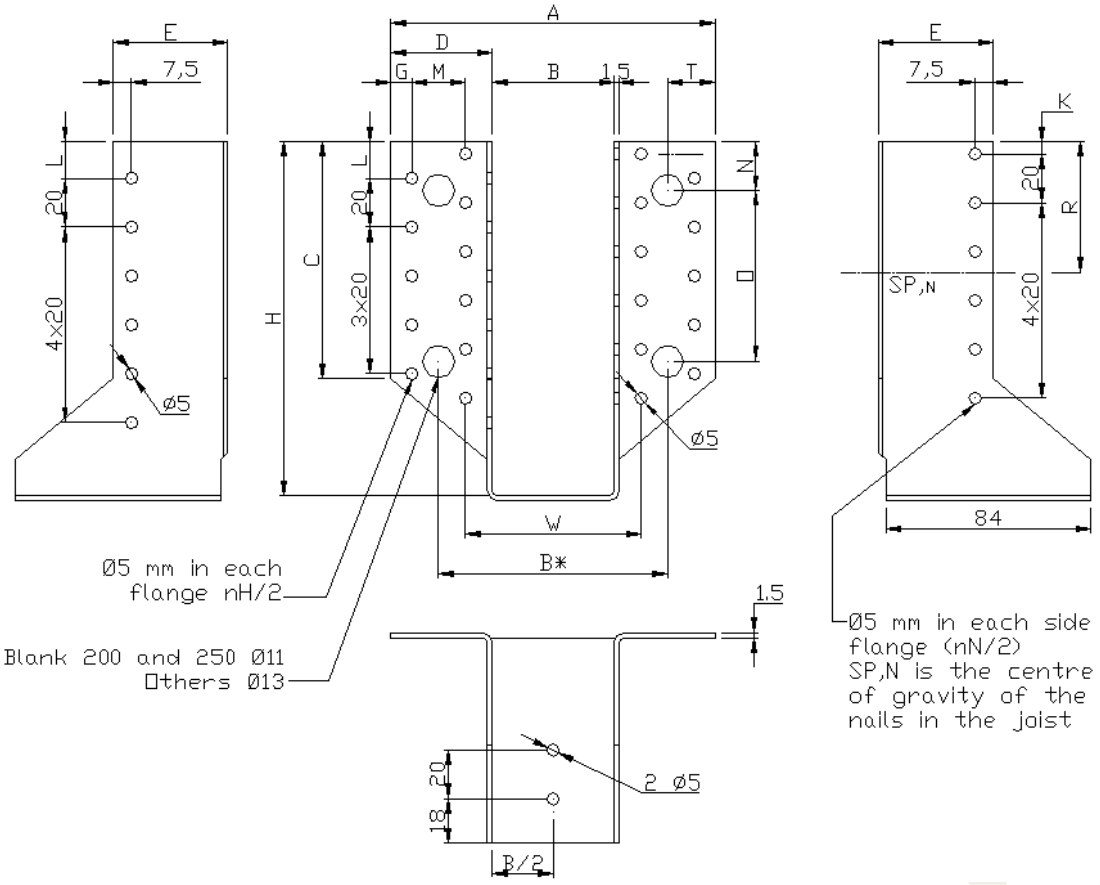

2nd blank model

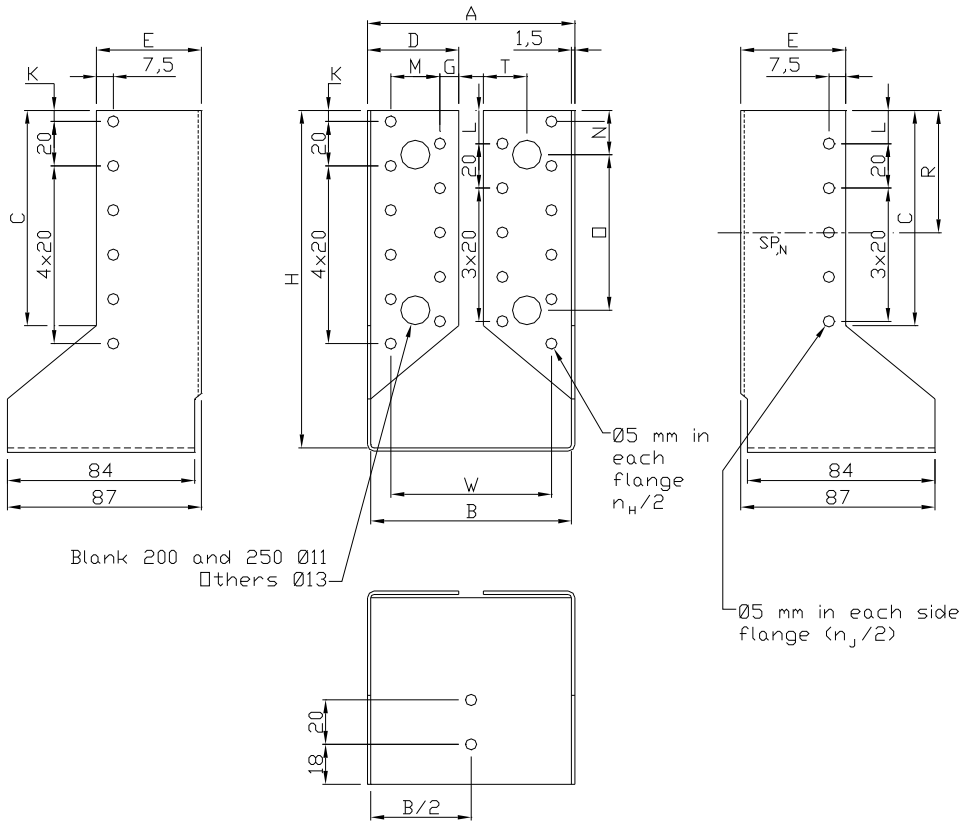

3rd blank model

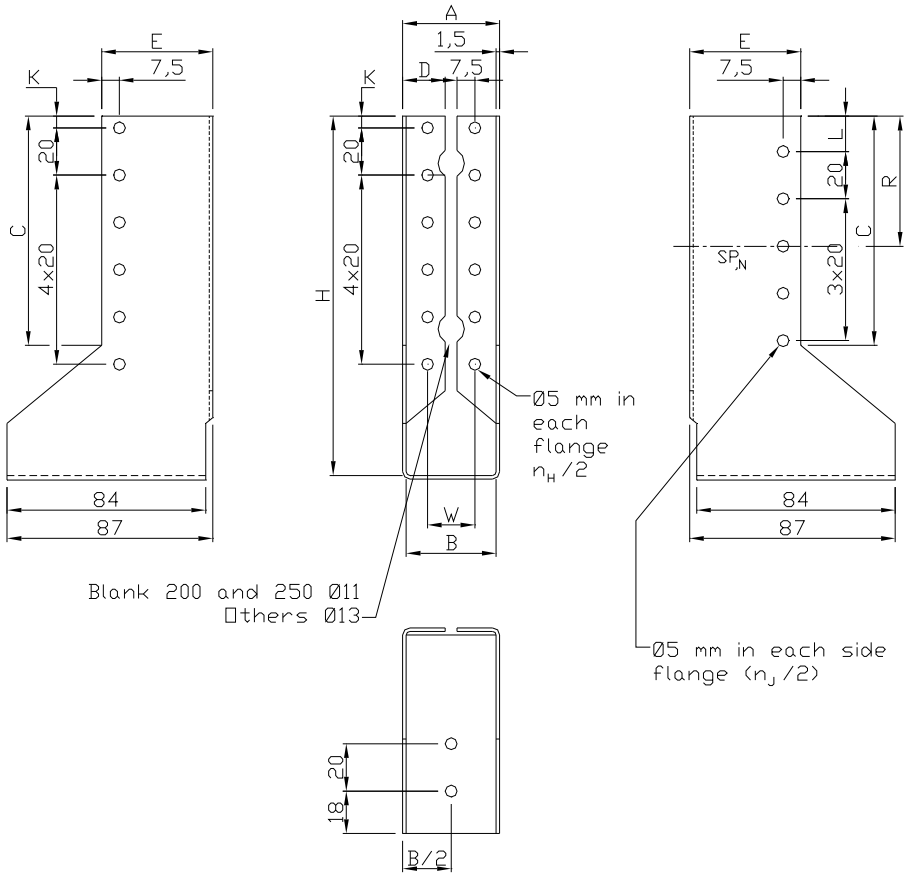

1st blank model

Blank	B min-max	C	D	E	G	K	L	M	N	O	T
250	24-80	52	41.5	46	8.5	10	20	22	25	--	19.5
300	24-80	77	41.5	46	8.5	5	15	22	20	50	19.5
340	24-80	97	41.5	46	8.5	5	15	22	20	70	19.5
380	24-120	97	41.5	46	8.5	5	15	22	20	70	19.5
440	24-120	127	41.5	46	8.5	5	15	22	20	100	19.5
500	24-120	157	41.5	46	8.5	5	15	22	20	60-70	19.5
Permitted deviation		+2 -0	±1.0	±1.0	±1.0	±1.0	±1.0	±0.2	±1.0-	±0.2	±1.0

Blank	Total n° of nails		Width interval		Height interval		A
	n_H	n_J	min	max	min	max	
250	12	7	24	80	85	113	= B + 83
300	18	10	24	80	110	138	= B + 83
340	22	12	24	80	130	158	= B + 83
380	22	12	24	120	130	178	= B + 83
440	28	15	24	120	160	208	= B + 83
500	34	18	24	120	190	238	= B + 83

2nd blank model

Blank	B min-max	C	D	E	G	K	L	M	N	O	T
380	80-120	97	41.5	46	8.5	5	15	22	20	70	19.5
440	80-120	127	41.5	46	8.5	5	15	22	20	100	19.5
500	80-120	157	41.5	46	8.5	5	15	22	20	60-70	19.5
Permitted deviation		+2 -0	±1.0	±1.0	±1.0	±1.0	±1.0	±0.2	±1.0-	±0.2	±1.0

Blank	Total n° of nails		Width interval		Height interval		A
	n_H	n_J	min	max	min	max	
380	22	12	80	120	130	150	= B + 3
440	28	15	80	120	160	180	= B + 3
500	34	18	80	120	190	210	= B + 3

3rd blank model

Blank	B min-max	C	D	E	G	K	L
250	38-80	52	18.5	46	7.5	10	20
300	38-80	77	18.5	46	7.5	5	15
340	38-80	97	18.5	46	7.5	5	15
380	38-79	97	18.5	46	7.5	5	15
440	38-79	127	18.5	46	7.5	5	15
500	38-79	157	18.5	46	7.5	5	15
Permitted deviation		+2 -0	±1.0	±1.0	±1.0	±1.0	±1.0

Blank	Total n° of nails		Width interval		Height interval		A
	n_H	n_J	min	max	min	max	
250	6	7	38	79	85	106	= B + 3
300	10	9	38	79	110	131	= B + 3
340	12	11	38	79	130	151	= B + 3
380	12	11	38	79	150.5	171	= B + 3
440	14	15	38	79	180.5	201	= B + 3
500	18	18	38	79	210.5	231	= B + 3

Table Notes:

- SAIX250 to SAIX500 are manufactured from a standard blank length, therefore the height will vary depending on hanger width.
- Joist hanger's height = (blank – width)/2

Joist hanger type SAEL

Face mount hanger with external flanges

2.0 mm thick pre-galvanized steel S250GD + Z (min Z275) according to EN 10326:2004 with tolerances according to EN 10143:1993

2.0 mm thick Stainless steel: 1.4401 and/or 1.4404 according to EN 10088:1997

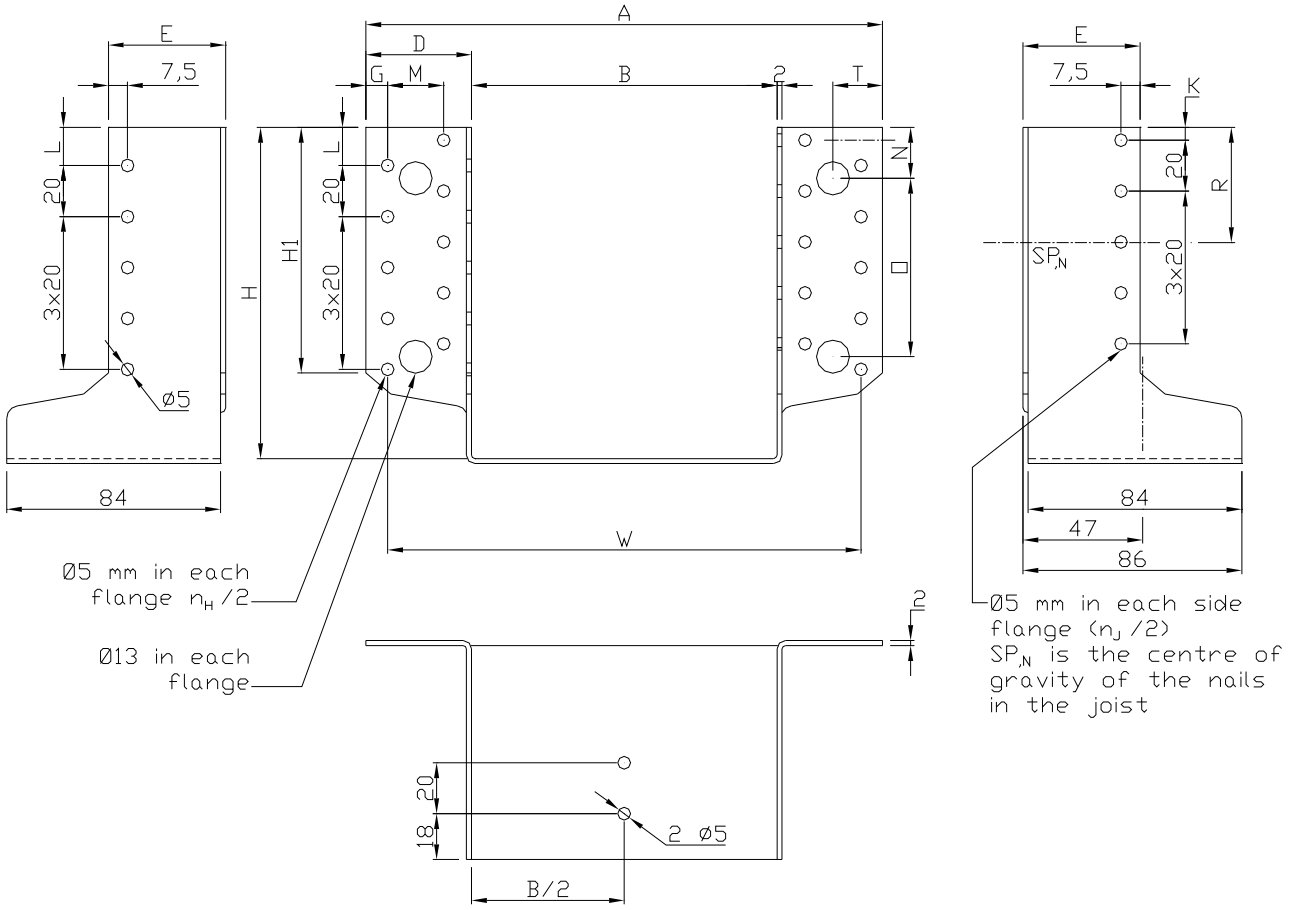

Blank	B min-max	C	D	E	G	K	L	M	N	O	R	T
300	24-120	76.4	41.5	46	8.5	5	15	22	20	50	40	19.5
340	24-120	96.4	41.5	46	8.5	5	15	22	20	70	50	19.5
380	24-160	96.4	41.5	46	8.5	5	15	22	20	70	50	19.5
440	24-160	126.4	41.5	46	8.5	5	15	22	20	100	65	19.5
500	24-160	156.4	41.5	46	8.5	5	15	22	20	60-70	80	19.5
Permitted deviation		+2 -0	±1.0	±1.0	±1.0	±1.0	±1.0	±0.2	±1.0-	±0.2	-	±1.0

Blank	Total n° of nails		Width interval		Height interval		A
	n_H	n_J	min	max	min	max	
300	16	8	24	120	90	138	= B + 83
340	20	10	24	120	110	158	= B + 83
380	20	10	24	160	110	178	= B + 83
440	26	13	24	160	140	208	= B + 83
500	32	16	24	160	170	238	= B + 83

Table Notes:

- SAE200 to SAE500 are manufactured from a standard blank length, therefore the height will vary depending on hanger width.
- Joist hanger's height = (blank – width)/2

Joist hanger type SAI

Face mount hanger with interior flanges

2.0 mm thick pre-galvanized steel S250GD + Z (min Z275) according to EN 10326:2004 with tolerances according to EN 10143:1993

2.0 mm thick Stainless steel: 1.4401 and/or 1.4404 according to EN 10088:1997

1st blank model

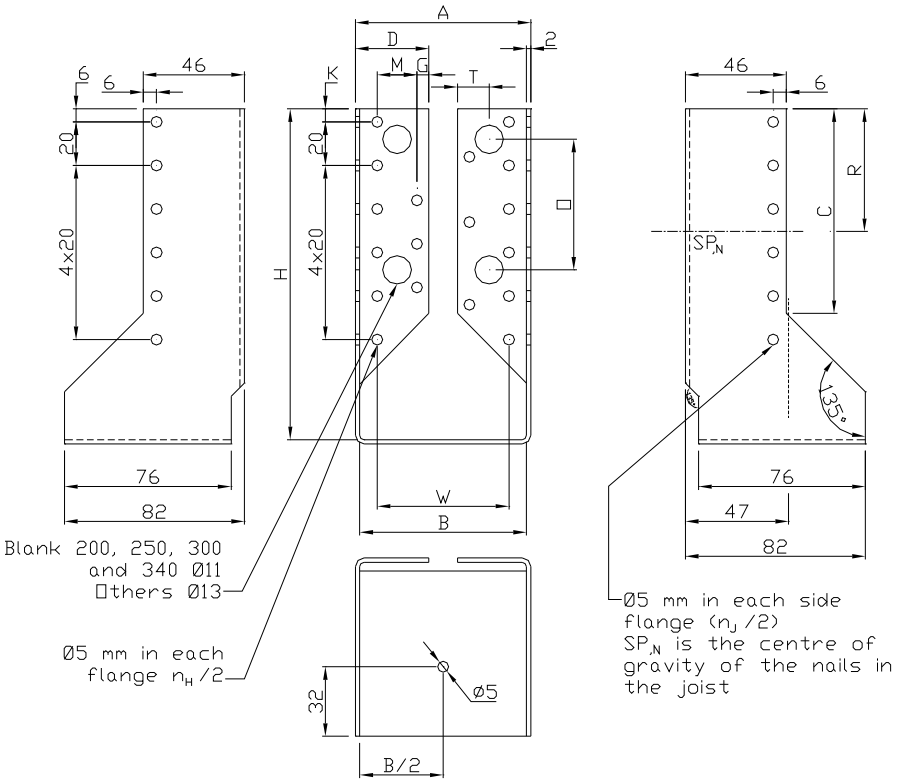

2nd blank model – SAI200 and SAI250 – width between 38 to 63 mm

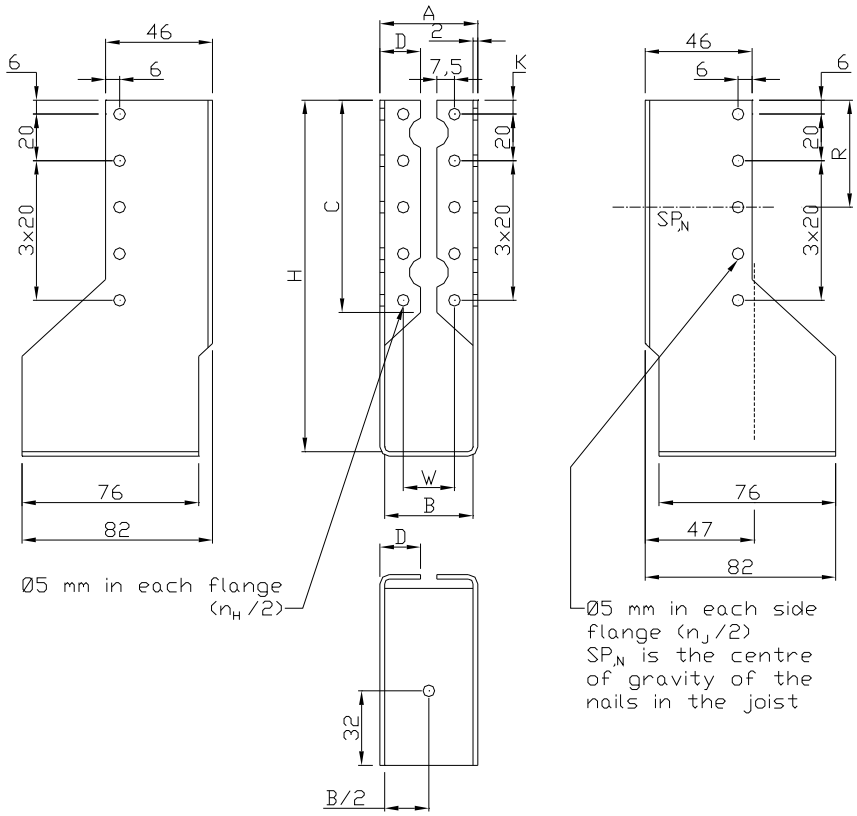

1st blank model

Blank	B min-max	C	D	G	K	M	O
200	64-80	24	33,5	5,5	12	18	--
250	64-80	50	33,5	5,5	7	18	--
300	64-80	77	33,5	5,5	6	18	60
340	64-120	77	33,5	5,5	6	18	60
380	64-120	94	33,5	5,5	6	18	60
440	64-120	124	33,5	5,5	6	18	80
500	64-120	154	33,5	5,5	6	18	60-60
Permitted deviation	+2 -0	+/-1.5	+/-1,0	+/-1,0	+/-1,0		+/-0.2

Blank	Total n° of nails		Width interval		Height interval		A
	n_H	n_J	min	max	min	max	
200	6	4	64	80	60	68	= B + 4
250	10	6	64	80	85	93	= B + 4
300	15	10	64	80	110	118	= B + 4
340	15	10	64	120	110	138	= B + 4
380	18	12	64	120	130	158	= B + 4
440	23	14	64	120	160	188	= B + 4
500	28	18	64	120	190	218	= B + 4

2nd blank model

Blank	B min-max	C	D	K
200	38-63	40	17.5	16
250	38-63	66	17.5	21
Permitted deviation	+2 -0	+/-1.5	+/-1.0	+/-1,0

Blank	Total n° of holes		Width interval		Height interval		A
	n_H	n_J	min	max	Min	max	
200	4	4	38	63	68.5	81	= B + 4
250	6	6	38	63	93.5	106	= B + 4

Table Notes:

- SAI200 to SAI500 are manufactured from a standard blank length, therefore the height will vary depending on hanger width.
- The range of the SAI offers a broad range of folding. But its installation depends on its width.
- Joist hanger's height = (blank – width)/2

Joist hanger type SAIL

Face mount hanger with interior flanges

2.0 mm thick pre-galvanized steel S250GD + Z (min Z275) according to EN 10326:2004 with tolerances according to EN 10143:1993

2.0 mm thick Stainless steel: 1.4401 and/or 1.4404 according to EN 10088:1997

1st blank model

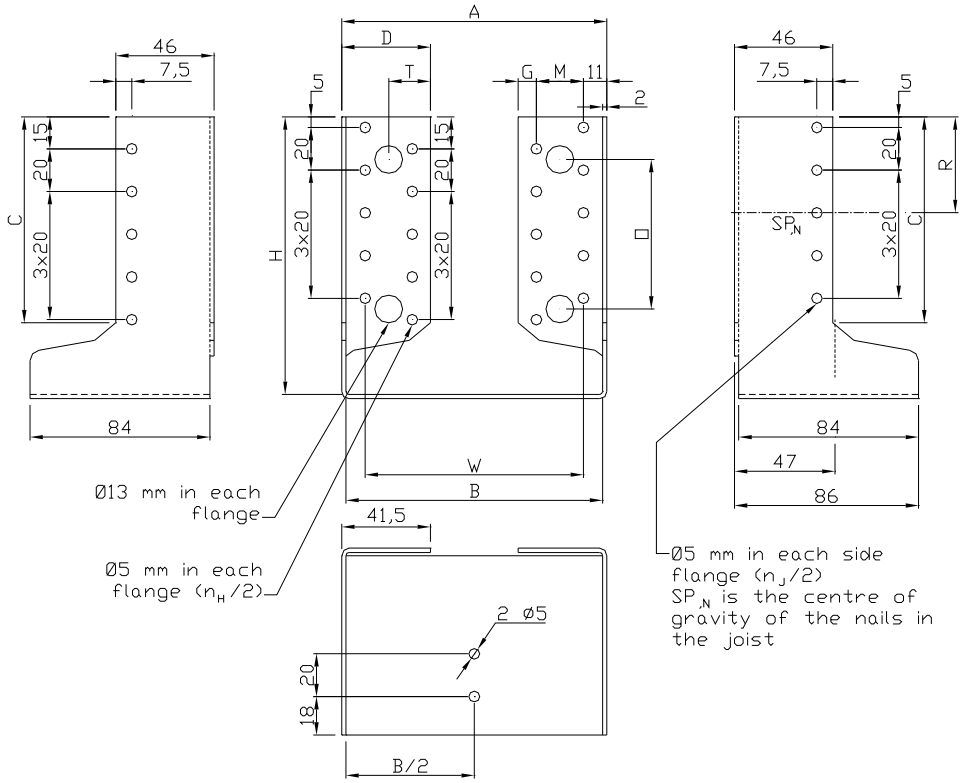

2nd blank model

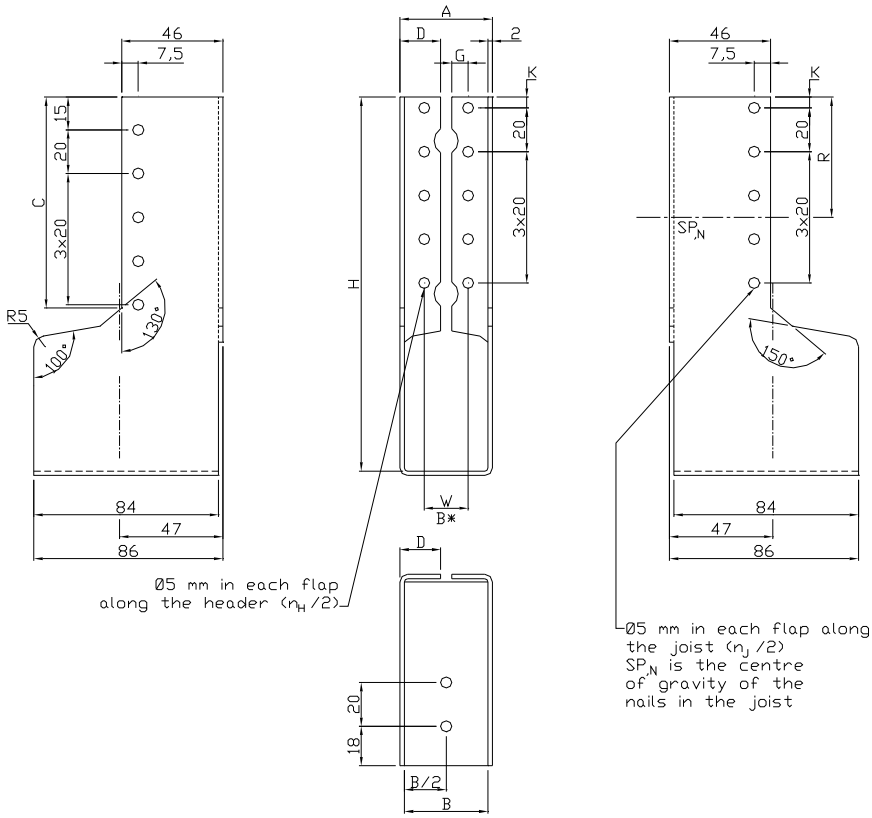

1st blank model

Blank	B min-max	C	D	G	K	M	O	T
300	80-120	76.4	41.5	8.5	5	22	50	19.5
340	80-120	96.4	41.5	8.5	5	22	70	19.5
380	80-160	96.4	41,5	8,5	5	22	70	19,5
440	80-160	126.4	41,5	8,5	5	22	100	19,5
500	80-160	156.4	41,5	8,5	5	22	60-70	19,5
Permitted deviation	+2 -0	+/-1.5	+/-1,0	+/-1,0	+/-1,0	+/-1,0	+/-0.2	+/-1,0

Blank	Total n° of nails		Width interval		Height interval		A
	n_H	n_J	min	max	min	max	
300	16	8	80	120	90	110	= B + 4
340	20	10	80	120	110	130	= B + 4
380	20	10	80	160	110	150	= B + 4
440	26	13	80	160	140	180	= B + 4
500	32	16	80	160	170	210	= B + 4

2nd blank model

Blank	B min-max	C	D	G	K
300	38-79	87	18.5	7.5	5
340	38-79	107	18.5	7.5	5
380	38-79	107	18.5	7,5	5
440	38-79	137	18.5	7,5	5
500	38-79	167	18.5	7,5	5
Permitted deviation	+2 -0	+/-1.5	+/-1.0	+1 -0	+/-1,0

Blank	Total n° of holes		Width interval		Height interval		A
	n_H	n_J	min	max	min	max	
300	8	10	38	79	110.5	131	= B + 4
340	10	10	38	79	130.5	151	= B + 4
380	10	12	38	79	150.5	171	= B + 4
440	12	14	38	79	180.5	201	= B + 4
500	16	18	38	79	210.5	231	= B + 4

Table Notes:

- SAIL300 to SAIL500 are manufactured from a standard blank length, therefore the height will vary depending on hanger width.
- The range of the SAIL offers a broad range of folding. But its installation depends on its width.
- Joist hanger's height = (blank – width)/2

Joist hanger type SBE

Face mount hanger with external flanges

1.5 mm thick pre-galvanized steel S250GD + Z (min Z275) according to EN 10326:2004 with tolerances according to EN 10143:1993

1.5 mm thick Stainless steel: 1.4401 and/or 1.4404 according to EN 10088:1997

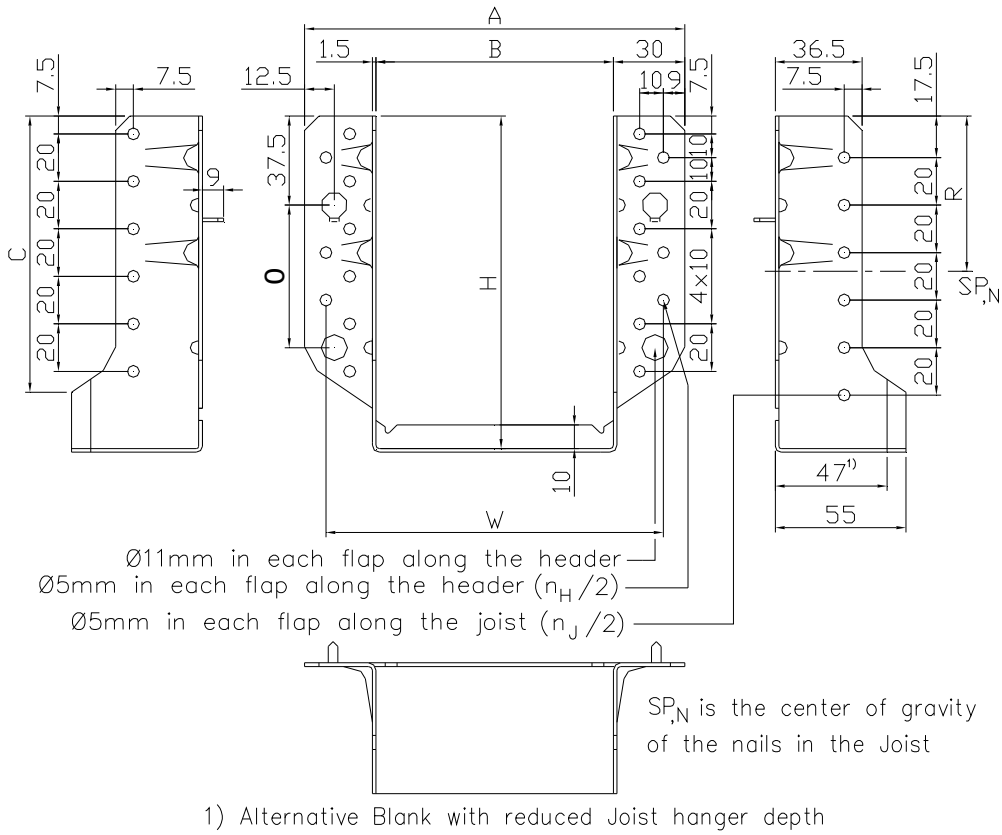

Blank	B min-max	A	C	O	W	R	$I_{D.fl}$ mm^4
230	32 – 65	B + 60	70.9	-	B + 42	32.5	2 352
260	32 – 71	B + 60	82.9	-	B + 42	42.5	2 800
320	32 – 81	B + 60	96.2	40	B + 42	52.5	4 943
380	32 – 101	B + 60	116.2	60	B + 42	65.5	8 956
440	32 – 121	B + 60	136.2	80	B + 42	72.5	14 764
500	32 - 141	B + 60	156.2	80	B + 42	82.5	24 800
Permitted deviation	+2 -0	+3 -1	±2.0	±0.2	+3 -1		

Blank	Total n° of nails		Width interval		Height interval	
	n_H	n_J	min	max	min	max
230	12	6	32	65	82.5	99
260	12	8	32	71	94.5	114
320	14	10	32	81	119.5	144
380	18	12	32	101	139.5	174
440	22	14	32	121	159.5	204
500	26	16	32	141	179.5	234

- Joist hanger's height = (blank – width)/2

Joist hanger type SBG

Face mount hanger with external flanges

1.5 mm thick pre-galvanized steel S250GD + Z (min Z275) according to EN 10326:2004 with tolerances according to EN 10143:1993

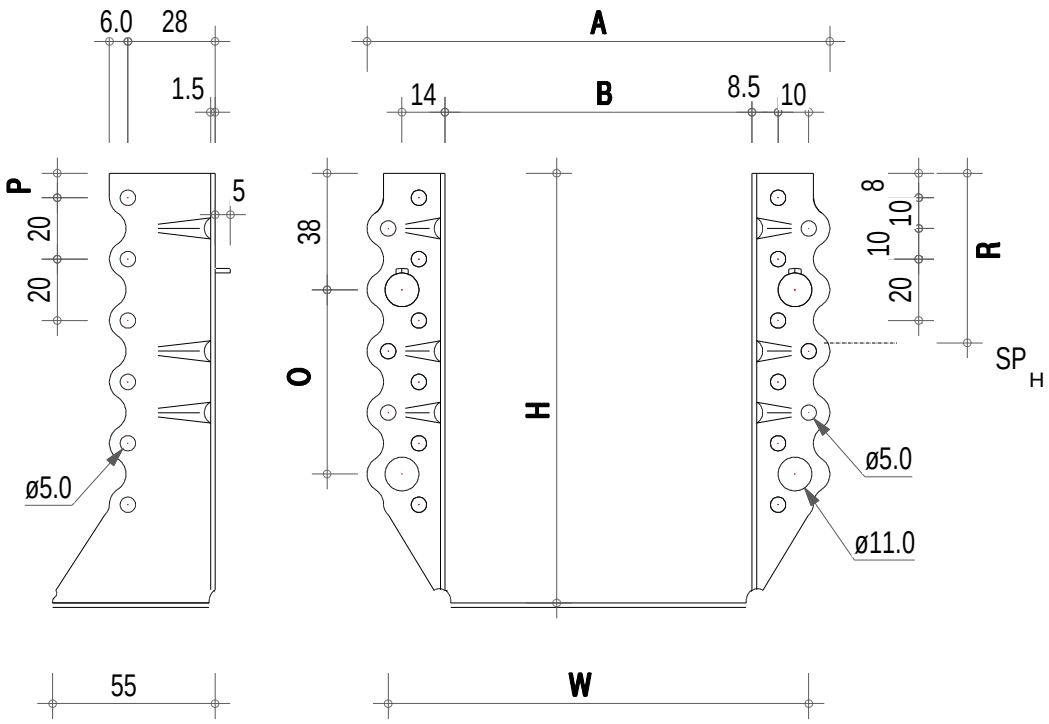

Blank	B min-max	A mm	O mm	P mm	W mm	R mm	$I_{p,fl}$ mm^4
230	38 -52	B + 50.8	-	28	B + 37.6	32	1 720
260	38 -64	B + 50.8	-	28	B + 37.6	38	2 800
320	38-80	B + 50.8	-	8	B + 37.6	49	5 888
380	38-100	B + 50.8	60	8	B + 37.6	58	10 200
440	38-120	B + 50.8	60	8	B + 37.6	68	16 400
500	38-140	B + 50.8	80	8	B + 37.6	78	24 800
Permitted deviation	+2 -0	+3 -1	±2.0	±0.2	+3 -1		

Blank	Total n°of nails		Partial n°of nails		Width interval		Height interval	
	n_H	n_J *	n_H	n_J *	min	max	min	max
230	10	6	6	3	38	52	89	96
260	12	6	8	4	38	64	98	111
320	16	10	10	6	38	80	120	141
380	18	12	12	6	38	100	140	171
440	22	14	14	8	38	120	160	201
500	26	16	16	8	38	140	180	231

- *: for t-t2 < 4 x d, don't use the holes in the joist, they are opposed. Then, the number of nails in the joist needs to be reduced in accordance with Eurocode 5, clause 8.3.1.1 (7)
- Joist hanger's height = (blank – width)/2

Joist hanger type SDED/G

Face mount hanger 2 parts with external flanges

1.5 mm thick pre-galvanized steel S250GD + Z (min Z275) according to EN 10326:2004 with tolerances according to EN 10143:1993

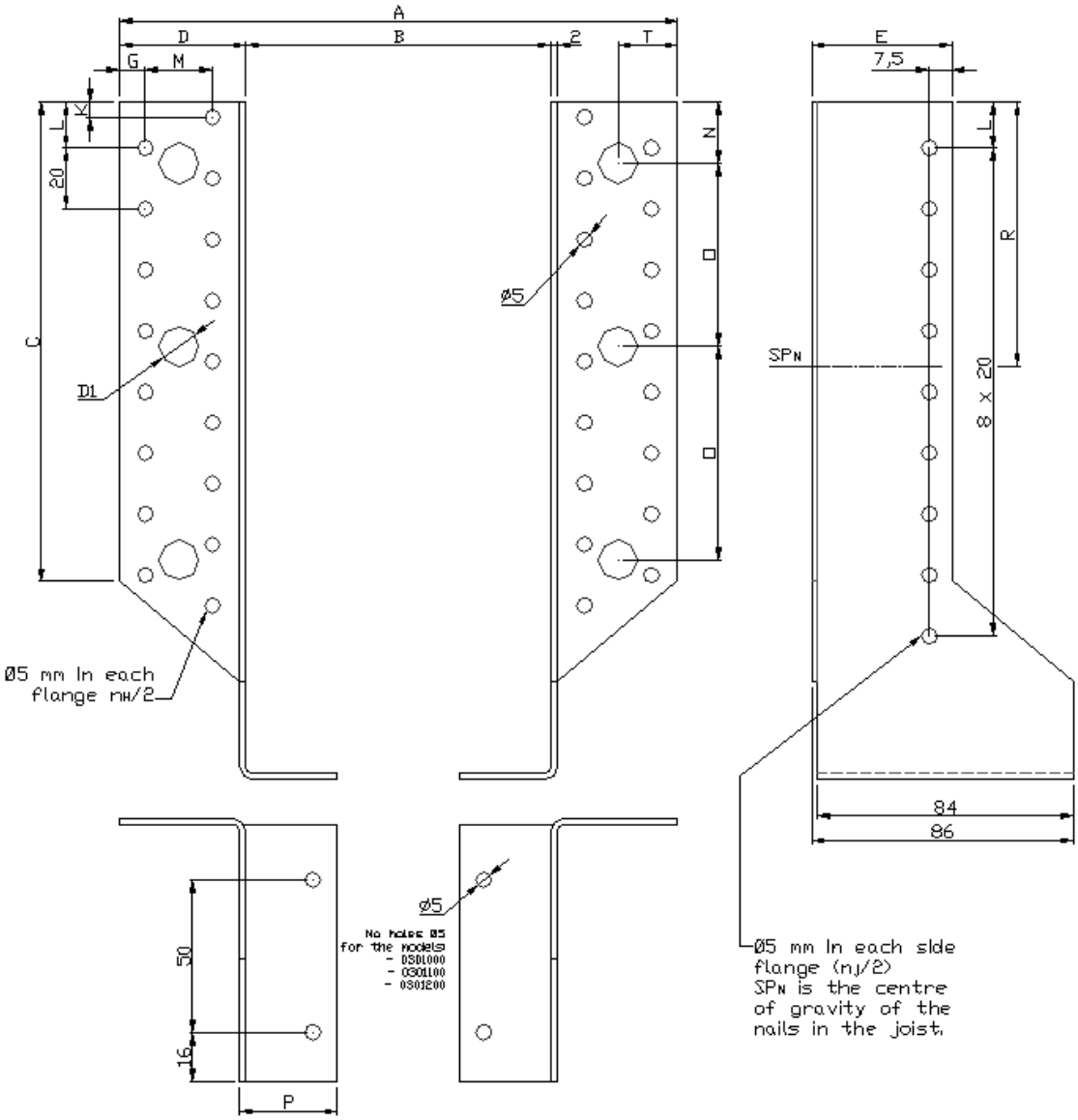

Blank	B min-max	C	D	E	G	K	L	M	N	O	R	T
0301000 - 260	60-200	65	37.5	37	75	7.5	17.5	17.5	17.5	37.5	47.5	13.5
0301100 - 380	60-250	105	40.0	42	7.5	7.5	17.5	20	27.5	60.0	67.5	20.0
0301200 – 440	60-250	115	42.0	47	7.5	7.5	7.5	20	17.5	40 - 40	127.5	20.0
300	60-250	77	41.5	46	8.5	5	15	22	20	50	55	19.5
340	60-250	97	41.5	46	8.5	5	15	22	20	70	65	19.5
380	60-250	97	41.5	46	8.5	5	15	22	20	70	65	19.5
440	60-250	127	41.5	46	8.5	5	15	22	20	100	75	19.5
Permitted deviation		+2 -0	±1.0	±1.0	±1.0	±1.0	±1.0	±0.2	±1.0-	±0.2	-	±1.0

Blank	Total n° of nails		Width interval		Height	Diameter	A
	n_H	n_J	min	max	Mm	mm	
0301000 -260	16	8	60	250	98	9	= B + 75
0301100 - 380	12	7	60	250	152	11	= B + 80
0301200 - 440	26	14	60	250	182	11	= B + 84
300	18	10	60	250	118	13	= B + 83
340	22	12	60	250	138	13	= B + 83
380	22	12	60	250	158	13	= B + 83
440	28	15	60	250	188	13	= B + 83

Fastener types and sizes

NAILS diameter	Length Min – max	Nail type
4.0	35 - 100	Connector nails in accordance with ETA-04/0013
4.2	35 - 60	Connector nails in accordance with ETA-04/0013
4.0	35 - 100	Ring shank nails according to EN 14592
3.75	30 - 32	SST Square Twist nails according to EN 14592
4,0 - 4,5	35 - 100	Round smooth nails according to EN 14592

SCREW diameter	Length Min – max	Screw type
5.0	35 - 50	Connector screws in accordance with ETA-04/0013

BOLTS diameter	Correspondence Holes diameter	Bolts type
8.0	Max. 2 mm. larger than the bolt diameter	See specification of the manufacturer
10.0		
12.0		

SST Square Twist nail

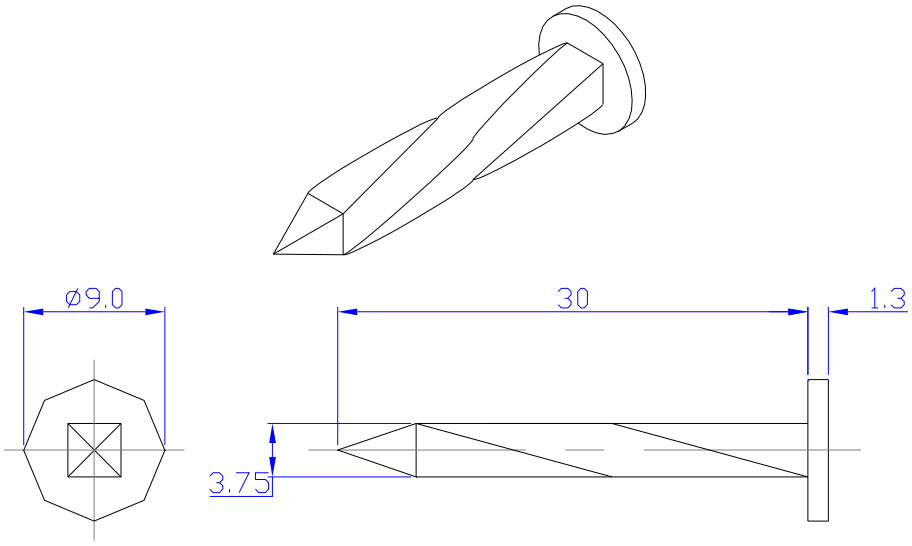

UNLESS OTHERWISE NOTED:

1. NO BURRS GREATER THAN 0.3MM
2. ALL DIMENSIONS: ±1.0MM
3. ALL ANGLES: ±1°
4. ALL BEND RADII: 1T
5. MATERIALMILD STEEL
6. FINISH: HOT DIP GALVANISED

Annex B
Characteristic capacities

Characteristic capacities of the joist hanger connections with nails or screws only.

The downward and the upward directed forces are assumed to act in the middle of the joist. The lateral force is assumed to act at an distance $e_{J,F}$ above the centre of gravity of the nails in the joist.

Two nails patterns are specified. A full nailing pattern, where there are nails in all the holes. A partial nailing pattern, where the number of nails in the joist and the header are at least half the numbers specified for full nailing. The nails in the joist may be staggered and there shall always be a nail in the upper and the lower holes. The other nails are distributed evenly over the height. The nails in the header shall be put in the holes closest to the bend line.

For joist hanger standard, BSD, I and BSDI the width of the joist shall be at least l+4d, where l is the length of the nails and d is the diameter of the nails in the joist, for full nailing and partial nailing without staggering the nails in the joist. For partial nailing with staggered nails in the joist the width shall be at least the penetration length of the nails.
For joist hanger SAE, SAEL, SBE, SAIL and SAIX the width of the joist shall be at least the penetration length of the nails.

A.1 Joist hangers with outward or inward flaps and fastened with nails or screws

A.1.1 Threaded nails or screws

This clause covers both the use of threaded nails and screws.

Force DOWNWARD toward the bottom plate:

For the most joist hangers excepted for the SDED/G

$$R_{Down,k} = \min\left\{ (n_J + 2) \cdot R_{lat,J,k} ; \frac{1}{\sqrt{\left(\frac{1}{n_H R_{lat,H,k}}\right)^2 + \left(\frac{1}{k_{H,1} R_{ax,H,k}}\right)^2}} \right\} \qquad \text{(A.1.1.1-A)}$$

For the SDED/G

$$R_{Down,k} = \min\left\{ (n_J) \cdot R_{lat,J,k} ; \frac{1}{\sqrt{\left(\frac{1}{n_H R_{lat,H,k}}\right)^2 + \left(\frac{1}{k_{H,1} R_{ax,H,k}}\right)^2}} \right\} \qquad \text{(A.1.1.1-B)}$$

Force UPWARD away from the bottom plate:

For the most joist hangers excepted for the SBG, SBE and SDED/G

$$R_{Up,k} = \min\left\{ n_J \cdot R_{lat,J,k}; \frac{1}{\sqrt{\left(\frac{1}{n_H R_{lat,H,k}}\right)^2 + \left(\frac{1}{k_{H,2} R_{ax,H,k}}\right)^2}} \right\} \qquad \text{(A. 1.1.2-A)}$$

For the SBG and SBE:

$$R_{up,k} = \min\left\{ n_J \cdot R_{lat,J,k}; \frac{1}{\sqrt{\left(\frac{1}{n_H R_{lat,H,k}}\right)^2 + \left(\frac{1}{k_{H,2} R_{ax,H,k}}\right)^2}}; 7b\sqrt{\frac{h_e}{1-\frac{h_e}{h}}} \right\} \qquad \text{(A.1.1.2-B)}$$

For the SDED/G

$$R_{up,k} = \min\left\{ n_J \cdot R_{lat,J,k}; \frac{1}{\sqrt{\left(\frac{1}{n_H R_{lat,H,k}}\right)^2 + \left(\frac{1}{k_{H,2} R_{ax,H,k}}\right)^2}}; 14\times 0{,}75\times b\sqrt{\frac{h_e}{1-\frac{h_e}{h}}} \right\} \qquad \text{(A1.1.2-C)}$$

LATERAL force:

For all joist hangers except the SBG, SBE and SDED/G:

The capacity from the nails in the joist

$$R_{lat,k} = \frac{n_J \cdot R_{lat,J,k}}{\sqrt{\left(\frac{2\sqrt{e_{J,F}^2 + e_{J,nail}^2}}{B}\right)^2 + \left(\frac{R_{lat,J,k}}{R_{ax,J,k}}\right)^2}} \qquad \text{(A.1.1.3-A)}$$

The capacity from the nails in the header

$$R_{lat,k} = \frac{R_{lat,H,k}}{\sqrt{\left(\frac{1}{n_H} + \frac{e_{H,F} \cdot H^*}{2I_{p,H}}\right)^2 + \left(\frac{e_{H,F} \cdot W^*}{2I_{p,H}}\right)^2}} \qquad \text{(A.1.1.3-B)}$$

The lateral capacity of the joist hanger is the minor of the capacity of the nails in the joist and the nails in the header.

For the SBG and SBE:

(A.1.1.3-C)

$$R_{lat} = \frac{½ n_H R_{lat,H,k}}{1 + \frac{n_H e_{H,F} y_{\max}}{2I_{p,fl}}} = k_{lat} R_{lat,H,k}$$

Figure B1: Vertical view of the compressed flange on the header.

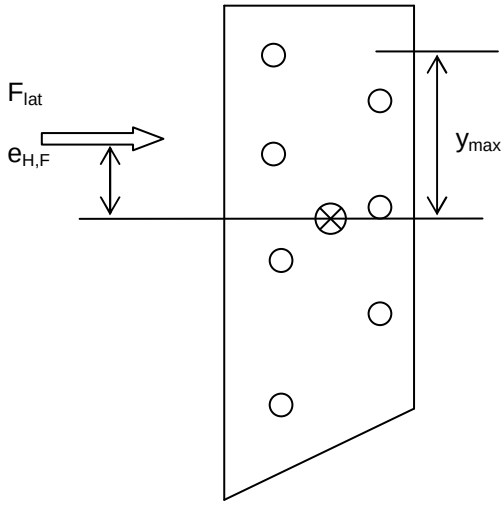

$$k_{lat} = \frac{n_H}{2 \times \left(1 + \frac{n_H \times e_{H,F} \times y_{\max}}{2 \times I_{p,fl}}\right)} \qquad \text{(A.1.1.3-D)}$$

If full nailing of all holes in the header flange is applied a contribution from the nails in the other flange can be added to the value of the above formula. This term is:

$$R_{lat} = ½ n_J R_{ax,J,k} \qquad \text{(A.1.1.3-E)}$$

For the SDED/G

The capacity of the SDED/G is given by the formula:

$$R_{ax,K} = ½ \times \left(n_H \times R_{lat,H,K} + n_J \times R_{ax,H,K}\right) \times \left(-\frac{22}{9} \times 10^{-3} \times \text{Blank} + 1.636\right) \times 0{,}65$$

(A.1.1.3.F)

AXIAL force:

For SBG and SBE only

In some cases, a solicitation of the joist can be applied in the F3 direction. We can estimate the capacity resistant of the joist hanger by R_{ax} as:

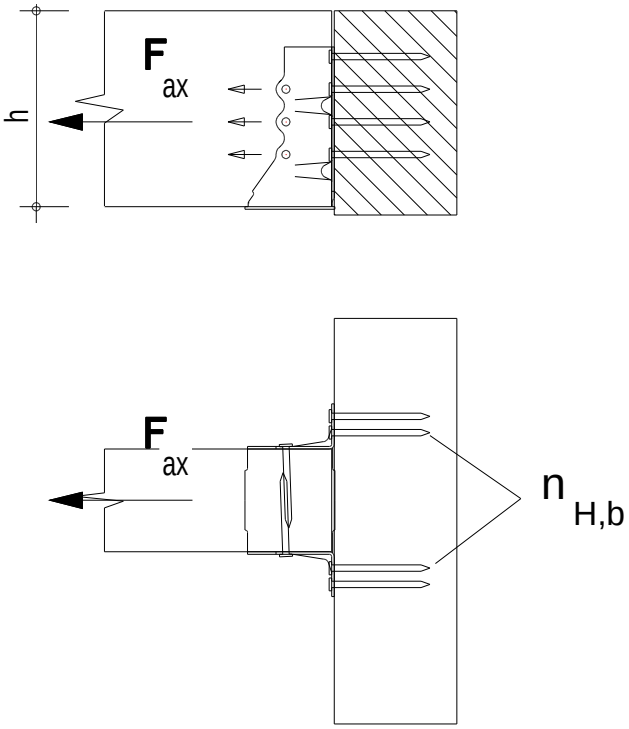

Figure B2: figure showing the axial solicitation in the F3 direction

The capacity of the joist hanger Rax is calculated as:

$$R_{ax} = \min \begin{cases} n_{J,eff} \times R_{lat,J,k} \times "c" \\ n_{H,b} \times R_{ax,H,k} \end{cases} \qquad \text{(A.1.1.4)}$$

“c” = reducing factor for the nails in the joist is equal to 0,85.

Symbols used in the ETA-06/0270

For the purpose of ETA-06/0270, the following symbols apply.

n_J	total number of nails in both sides of the joist
$n_{J,eff}$	effective number of nails in the joist $\left[\text{round down}\left(\frac{n_j}{2}\right)\right]\times 2$
$n_{H,b}$	number of nails in the header in the first row close to the bending line of the side flange.
n_H	total number of nails in the side of the header
$R_{lat,k}$	characteristic lateral load-carrying capacity of the nails in the joist or in the header indicated by the indices J or H
$R_{ax,k}$	characteristic axial load-carrying capacity of the nails in the joist or in the header indicated by the indices J or H
b	width of the joist hanger, see figure B3.
$e_{J,F}$	distance of the lateral force above the centre of gravity of the nails in the joist, see figure B3.
$e_{J,nail}$	distance from the nails in the joist to the surface of the header, see figure B3. For the joist hangers: Standard, SBE, I, BSD, BSDI fastened with threaded nails it has been documented by tests that this eccentricity term can be disregarded.
$e_{H,F}$	distance of the lateral force above the centre of gravity of the nails in the header, see figure B4.
$I_{p,H}$	polar moment of inertia of the whole nail group in the header
H^*	the maximum vertical distance between the nails in header
W^*	the maximum horizontal distance between the nails in header
h	Height of the joist
h_e	Effective height = distance from upper nail to the bottom plate (=H-P, see annex A -SBG's details)
$k_{H,1}$	form factor, see Annex C
$k_{H,2}$	form factor, see Annex D
$I_{p,fl}$	Polar moment of inertia around the centre of gravity of the nail group in one header flange
y_{max}	Maximum distance from a nail to the centre of gravity, see figure 3.2.
Blank	The blank length of the joist hanger.

Illustrations showing the position of the centre of gravity:

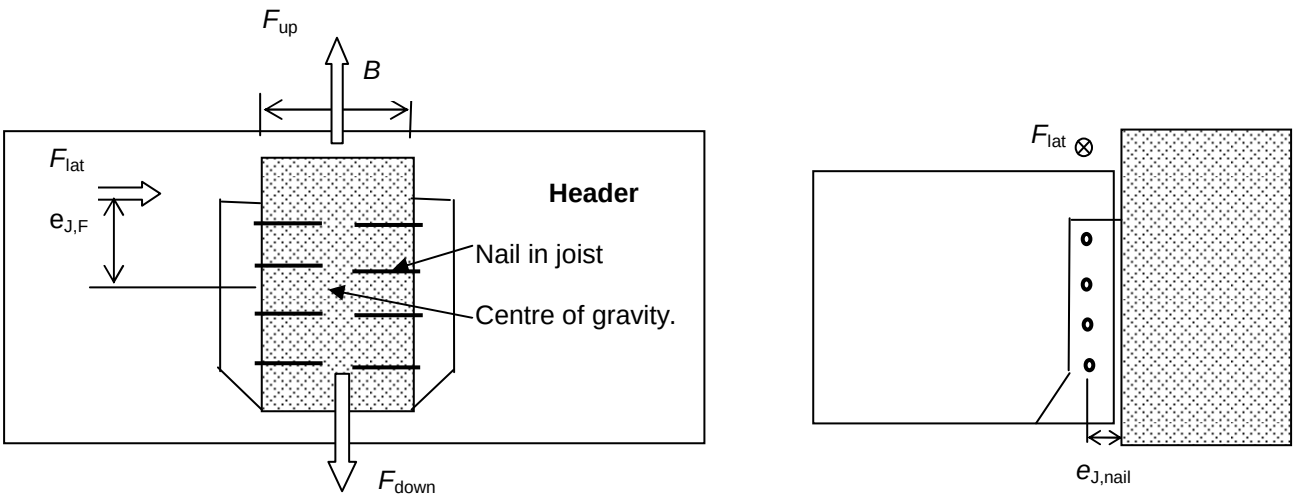

Figure B3: Definition of $e_{j,F}$ and $e_{j,nail}$

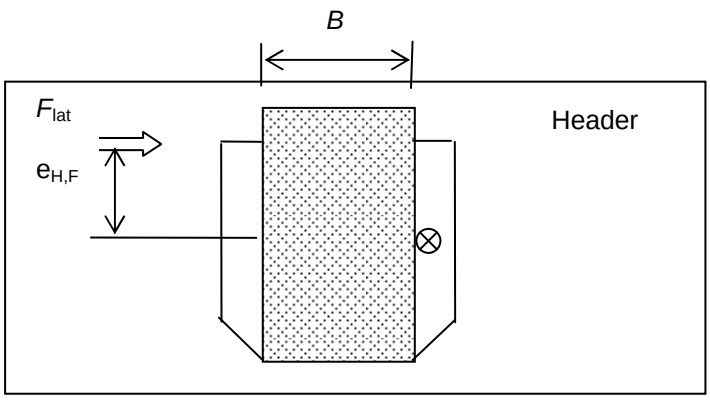

Figure B4: The lateral force acts with an eccentricity $e_{H,F}$ in relation to the centre of gravity of the header nails in one flange - marked by ⊗ - in the compressed side.

A.1.2 Outward or inward flaps, Square twist nails or smooth round nails

Force downward toward the bottom plate:

$$R_{Down,k} = \min\{n_{J,ef,1} \cdot R_{lat,J,k}; n_H \cdot R_{lat,H,k}\} \quad \text{(A.1.2.1)}$$

where the following symbols, which have not been defined in subclause A.1.1 are:

$n_{J,ef,1}$ effective number of nails in the side of the joist, see Annex E

Force upward away from the bottom plate:

$$R_{Down,k} = \min\{n_{J,ef,2} \cdot R_{lat,J,k}; n_H \cdot R_{lat,H,k}\} \quad \text{(A.2.2.2)}$$

where the following symbols, which have not been defined in sub clause A.1.1 are:

$n_{J,ef,2}$ effective number of nails in the side of the joist, see Annex E

A.1.3 Combined forces

A.1.3.1 - In case of combined forces shall the relevant of the following inequalities be fulfilled:

Downward force:

$$\left(\frac{F_{Down,d}}{R_{Down,d}}\right)^2 + \left(\frac{F_{lat,d}}{R_{lat,d}}\right)^2 \leq 1{,}0 \quad \text{(A.1.3.1)}$$

Upward force:

$$\left(\frac{F_{Up,d}}{R_{Up,d}}\right)^2 + \left(\frac{F_{lat,d}}{R_{lat,d}}\right)^2 \leq 1{,}0 \quad \text{(A.1.3.2)}$$

A.1.3.2 - In case of axial forces, for the SBE and SBG, the relevant inequalities shall be fulfilled:

Downward force:

$$\left(\frac{F_{Down,d}}{R_{Down,d}}\right)^2 + \left(\frac{F_{lat,d}}{R_{lat,d}}\right)^2 + \left(\frac{F_{ax,d}}{R_{ax,d}}\right)^2 \leq 1{,}0 \quad \text{(A.1.3.3)}$$

Upward force:

$$\left(\frac{F_{Up,d}}{R_{Up,d}}\right)^2 + \left(\frac{F_{lat,d}}{R_{lat,d}}\right)^2 + \left(\frac{F_{ax,d}}{R_{ax,d}}\right)^2 \leq 1{,}0 \quad \text{(A.1.3.4}$$

A.2 Characteristic capacities of the joist hanger connections with bolts

A.2.1 – General requirements:

For joist hangers connected to a wall of concrete, lightweight concrete or to a steel member the assumptions for the calculation of the load-carrying capacity of the connection are:

- The Transfer of force from the joist to the joist hanger is as for a wood-wood connection, see clause A.1.
- The bolts shall always be positioned symmetrically about the vertical axis of the joist hanger.
- For concrete, the bolts shall use washers recommended with the mechanical anchor delivery by the suppliers. Check it is a CE marked product with an ETA.
- For bolted application, washer Ø18 mm shall be installed under the upper bolt heads or nuts.

A.2.2 - **Characteristic capacities of a bolted joist hanger connection** ***(except for SBG and SBE, see clause A.2.3)***

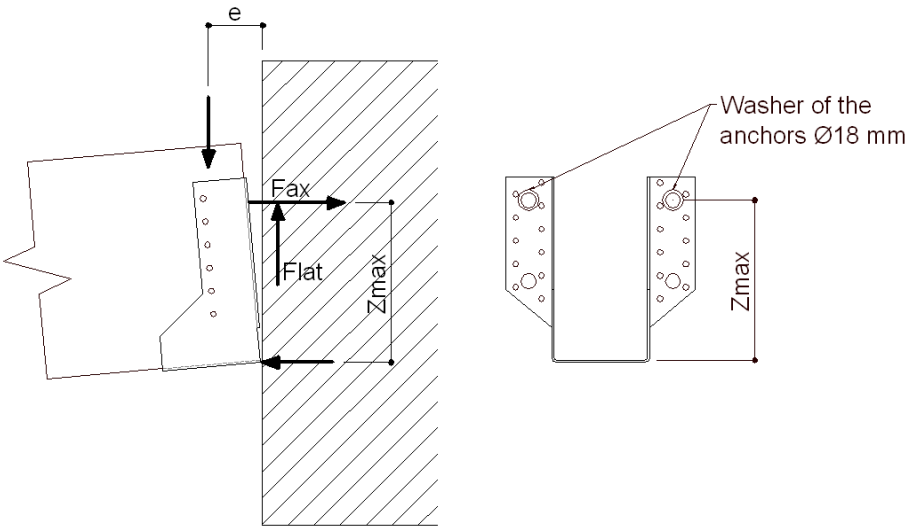

Figure B5: definition of Z_{max} when a downward direction is applied on the concrete application

For a **downward force** the formula for the characteristic load-carrying capacity of the joist hanger connection is:

$$R_{Down,k} = \min\left[(n_j + 2) \times R_{lat,j,k}; n_b \times R_{lat,b,k}\right]$$ for all the joist hangers excepted SDED/G, SBE and SBG (A.2.2.1)

$$R_{Down,k} = \min\left[n_j \times R_{lat,j,k}, n_b \times R_{lat,b,k}\right]$$ for the SDED/G (A.2.2.2)

Where

n_b number of bolts

n_J total number of nails in both sides of the joist

$R_{ax,J,k}$ characteristic axial load-carrying capacity of the nails in the joist

$R_{lat,J,k}$ characteristic lateral load-carrying capacity of the nails in the joist

$R_{lat,b,k}$ characteristic lateral load-carrying capacity of the anchor bolt. This is limited to the minimum value of either **9,51 kN** (**7,68 kN** for the BSD and BSDI) or the characteristic lateral load-carrying capacity of the anchor bolt in the material to which it is fastened.

$$R_{lat,b,k} = \frac{R_{down,k}}{n_b} \quad \text{(A.2.2.3)}$$

$R_{ax,b}$ axial force in the anchor bolt

$$R_{ax,b,k} = \frac{F_{Down,k} \times e}{2 \times Z_{max}} \quad \text{(A.2.2.4)}$$

A.2.3 - For the SBG and SBE's connection Timber to concrete:

A.2.3.1 - For vertical load (in the symmetric axis) of the joist hangers SBG and SBE with bolts

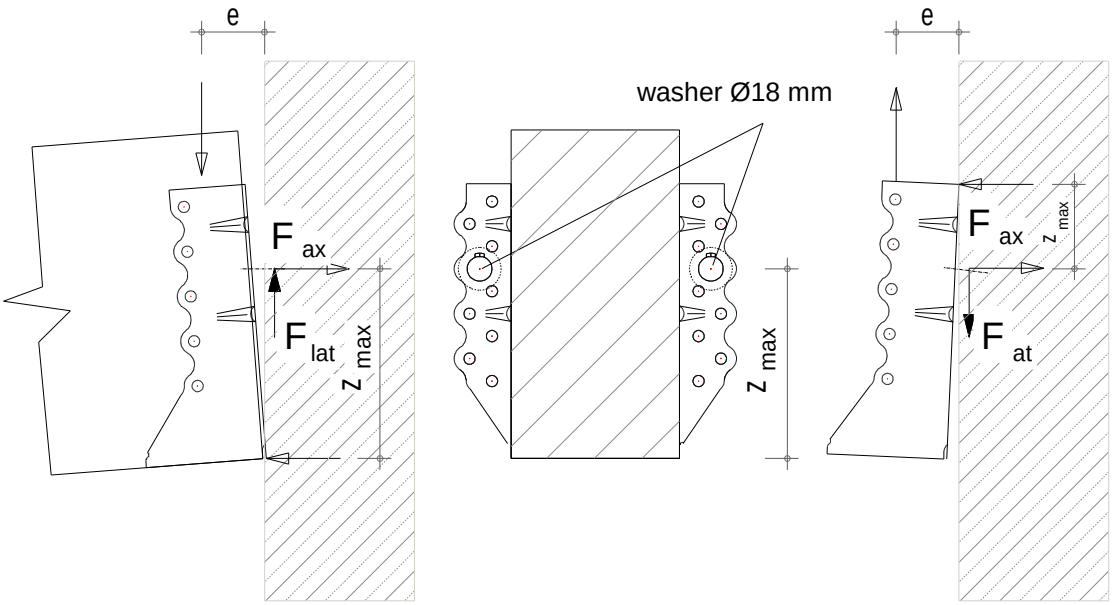

Figure B6: figure showing the SBE or SBG solicitation for concrete application

For a **downward force** the formula for the characteristic load-carrying capacity of the joist hanger connection is:

$$R_{Down,k} = \min\{(n_J + 2) \cdot R_{lat,J,k}; n_{ef,b} R_{bolt,lat,k}\} \qquad \text{(A.2.3.1)}$$

For an **upward force** the formula for the characteristic load-carrying capacity of the joist hanger connection is

$$R_{Up,k} = \min\left\{ n_J \times R_{lat,J,k}; 7 \times B \times \sqrt{\frac{h_e}{1 - \frac{h_e}{h}}} \right\} \qquad \text{(A.2.3.2)}$$

where

B	width of joist in mm
e	eccentricity = distance from the nails in the joist to the header to the surface of the header (it is 28 mm by the SBG)
h	depth of joist in mm
h_e	effective depth = distance from upper nail to the bottom plate in mm
n_b	number of bolts
$n_{ef,b}$	effective number of bolts = 2,0 with 2 bolts in the SBG hanger = 3,2 with 4 bolts in the SBG hanger
n_J	total number of nails in both sides of the joist
$R_{ax,J,k}$	characteristic axial load-carrying capacity of the nails in the joist
$R_{lat,J,k}$	characteristic lateral load-carrying capacity of the nails in the joist
$R_{bolt,lat,k}$	characteristic lateral load-carrying capacity of the anchor bolt. This is limited to 7,1 kN.
z_{max}	distance from upper bolts to bottom plate or by uplift force the distance from the lower bolt to the top of joist hanger

The forces in the anchor bolts are calculated from:

$$F_{bolt,lat} = F / n_{ef,b} \quad \text{(A.2.3.3)}$$

$$F_{bolt,ax} = F \times e / (2 \times z_{max}) \quad \text{(A.2.3.4)}$$

It must be checked, that the combination of lateral and axial force in the anchor bolt can be carried by these forces.

A.2.3.2 Lateral capacity of the joist hanger SBG or SBE with bolt

Different formulas are used for joist hangers with 2 or 4 anchor bolts into the supporting structure of for example concrete or steel.

A.2.3.2.1 For the SBG or SBE's connection Timber to concrete: with 2 bolts

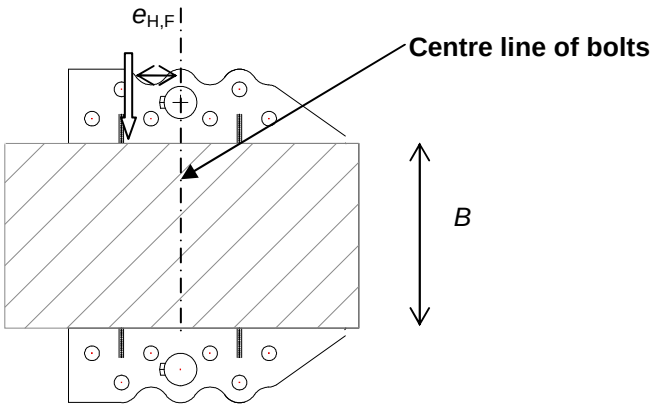

Figure B7. Lateral force on a SBG joist hanger with 2 bolts.

The minimum value of the following formulas for the characteristic lateral load-carrying capacity of the joist hanger connection applies to a SBG joist hanger with 2 bolts.

For small eccentricities $e_{H,F}$:

$$R_{lat,k} = \frac{\dfrac{2R_{bolt,lat,k}}{R^2_{ax,J,k}} + \sqrt{\dfrac{4R^2_{bolt,lat,k}}{R^4_{ax,J,k}} - \left(4\dfrac{R^2_{bolt,lat,k}}{R^2_{ax,J,k}} - n_J^2\right)\left[\left(\dfrac{e_{H,F}}{BR_{lat,J,k}}\right)^2 + 1/R^2_{ax,J,k}\right]}}{2\left[\left(\dfrac{e_{H,F}}{BR_{lat,j,k}}\right)^2 + 1/R^2_{ax,J,k}\right]} \quad \text{(A.2.3.5)}$$

For larger eccentricities $e_{H,F}$:

$$R_{lat,k} = \frac{½ B n_J R_{lat,J,k}}{e_{H,F}} \quad \text{(A.2.3.6)}$$

where the symbols previously not defined are

$e_{H,F}$ is the eccentricity of the lateral force in relation to the centre of the bolts in each flange.
It shall be taken as the numerical value of the eccentricity

$R_{bolt,lat,k}$ characteristic lateral capacity of the anchor bolt, however, maximum 12,0 kN

A.2.3.2.2 For the SBG or SBE´s connection Timber to concrete: with 4 bolts

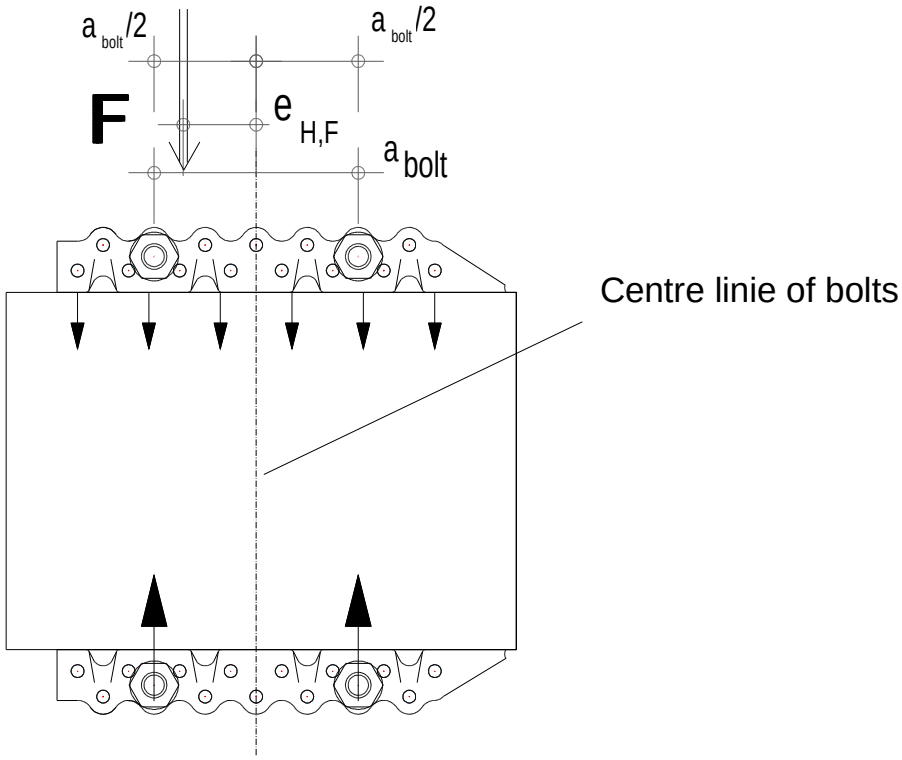

Figure B8:. Lateral force on a SBG joist hanger with 4 bolts.

For a lateral force the formula for the characteristic load-carrying capacity of the joist hanger connection with 4 10 mm bolts is:

$$R_{lat,k} = \frac{a_{bolt}}{e_{H,F} + ½a_{bolt}} R_{bolt,lat,k} + ½n_J R_{ax,J,k} \qquad \text{(A.2.3.7)}$$

where the symbols are defined in the previous text, also the limitation on the characteristic lateral capacity of a 10 mm bolt.

A.2.4 Combination of forces

For a combination of forces in the vertical direction and in the lateral direction the following inequalities shall be fulfilled.

Downward force F_{down} and lateral force F_{lat}

$$\left(\frac{F_{down,d}}{R_{down,d}}\right)^2 + \left(\frac{F_{lat,d}}{R_{lat,d}}\right)^2 \leq 1{,}0 \qquad \text{(A.2.3.8)}$$

Upward force F_{up} and lateral force F_{lat}

$$\left(\frac{F_{up,d}}{R_{up,d}}\right)^2 + \left(\frac{F_{lat,d}}{R_{lat,d}}\right)^2 \leq 1{,}0 \qquad \text{(A.2.3.9)}$$

Annex C
Form factor $k_{H,1}$ for downward force

The form factor $k_{H,1}$ is to be used for calculation of the load-carrying capacity of a wood-wood connection with threaded nails or screws subjected to a downward force towards the bottom plate.

Two nails patterns are specified. A full nailing pattern, where there are nails in all the holes. A partial nailing pattern, where the number of nails in the joist and the header are at least half the numbers specified for full nailing. The nails in the joist may be staggered and there shall always be a nail in the upper and the lower holes. The other nails are distributed evenly over the height. The nails in the header shall be put in the holes closest to the bend line.

n_H: total number of nails in the side of the header
n_J: total number of nails in both sides of the joist

Table C1	$k_{H,1}$ for Standard Joist Hanger and type I																					
	Full nailing - downward force																					
	Blank																					
	238		260		280		320		358		380		380/127		418		440		440/150		500	
	n_H	n_J	n_H	n_J	n_H	n_J	n_H	n_J	n_H	n_J	n_H	n_J	n_H	n_J	n_H	n_J	n_H	n_J	n_H	n_J	n_H	n_J
	14	8	16	8	14	8	20	10	18	10	24	12	24	12	24	12	26	14	26	14	30	16
Width B [mm]	Height H [mm]	$k_{H,1}$	Height H [mm]	$k_{H,1}$	Height H [mm]	$k_{H,1}$	Height H [mm]	$k_{H,1}$	Height H [mm]	$k_{H,1}$	Height H [mm]	$k_{H,1}$	Height H [mm]	$k_{H,1}$	Height H [mm]	$k_{H,1}$	Height H [mm]	$k_{H,1}$	Height H [mm]	$k_{H,1}$	Height H [mm]	$k_{H,1}$
50	94	19,0	105	23,7			135	34,3			165	51,4					192,5	60,7			225	79,9
52	93	18,6	104	23,2			134	33,7			164	50,8					191,5	60,1			224	79,2
54	92	18,2	103	22,7			133	33,2			163	50,1					190,5	59,5			223	78,5
56	91	17,8	102	22,3			132	32,7			162	49,5					189,5	58,9			222	77,8
60	89	16,9	100	21,3			130	31,7			160	48,3					187,5	57,7			220	76,5
64	-	-	98	20,4			128	30,6			158	47,0					185,5	56,5			218	75,1
65	-	-	-	-			127,5	30,4			157,5	46,7					185	56,2			217,5	74,8
68	-	-	-	-			126	29,6			156	45,8					183,5	55,3			216	73,8
71	-	-	-	-			124,5	28,9			154,5	44,9					182	54,4			214,5	72,8
75	-	-	-	-			122,5	27,9			152,5	43,7					180	53,2			212,5	71,4
76	-	-	-	-			122	27,6			152	43,4					179,5	52,9			212	71,1
80	-	-	-	-			120	26,7			150	42,2					177,5	51,7			210	69,8
81	-	-	-	-			-	-			149,5	41,9					177	51,4			209,5	69,5
85	-	-	-	-			-	-			147,5	40,8					175	50,3			207,5	68,1
89	-	-	-	-			-	-			145,5	39,6					173	49,1			205,5	66,8
93	-	-	-	-			-	-			143,5	38,4					171	48,0			203,5	65,5
97	-	-	-	-			-	-			141,5	37,3					169	46,8			201,5	64,2
100	-	-	-	-	90	17,9	-	-			140	36,5					167,5	46,0			200	63,3
101	-	-	-	-			-	-			-	-					167	45,7			199,5	63,0
105	-	-	-	-			-	-			-	-					165	44,6			197,5	61,7
109	-	-	-	-			-	-			-	-					163	43,5			195,5	60,4
113	-	-	-	-			-	-			-	-					161	42,4			193,5	59,1
117	-	-	-	-			-	-			-	-					159	41,3			191,5	57,9
120	-	-	-	-			-	-	119	22,2	-	-					157,5	40,4			190	57,0
124	-	-	-	-			-	-			-	-					-	-			188	55,7
127													126,5	29,7							187	54,8
128	-	-	-	-			-	-			-	-					-	-			186	54,5
132	-	-	-	-			-	-			-	-					-	-			184	53,3
136	-	-	-	-			-	-			-	-					-	-			182	52,1
140	-	-	-	-			-	-			-	-			139	30,1	-	-			180	50,9
150																			142,5	25,3		

In the case of intermediate width, $k_{H,1}$ can be calculated by linear interpolation.

Table C2	$k_{H,1}$ for Standard Joist Hanger and type I																					
	Partial nailing - downward force																					
	Blank																					
	238		260		280		320		358		380		380/127		418		440		440/150		500	
	n_H	n_J	n_H	n_J	n_H	n_J	n_H	n_J	n_H	n_J	n_H	n_J	n_H	n_J	n_H	n_J	n_H	n_J	n_H	n_J	n_H	n_J
	8	4	8	4	8	4	10	6	10	6	12	6	10	6	12	6	14	8	12	6	16	8
Width B [mm]	Height H [mm]	$k_{H,1}$	Height H [mm]	$k_{H,1}$	Height H [mm]	$k_{H,1}$	Height H [mm]	$k_{H,1}$	Height H [mm]	$k_{H,1}$	Height H [mm]	$k_{H,1}$	Height H [mm]	$k_{H,1}$	Height H [mm]	$k_{H,1}$	Height H [mm]	$k_{H,1}$	Height H [mm]	$k_{H,1}$	Height H [mm]	$k_{H,1}$
34	102	14,6	113	14,6	-	-	143	21,4	-	-	173	29,9	-	-	-	-	200,5	39,8	-	-	233	45,9
36	101	14,3	112	14,3	-	-	142	21,1	-	-	172	29,6	-	-	-	-	199,5	39,5	-	-	232	45,5
40	99	13,7	110	13,7	-	-	140	20,4	-	-	170	28,9	-	-	-	-	197,5	38,7	-	-	230	44,7
44	97	13,2	108	13,2	-	-	138	19,8	-	-	168	28,2	-	-	-	-	195,5	38,0	-	-	228	43,9
48	95	12,6	106	12,6	-	-	136	19,2	-	-	166	27,5	-	-	-	-	193,5	37,3	-	-	226	43,2
52	93	12,1	104	12,1	-	-	134	18,6	-	-	164	26,8	-	-	-	-	191,5	36,6	-	-	224	42,4
56	91	11,6	102	11,6	-	-	132	18,0	-	-	162	26,1	-	-	-	-	189,5	35,8	-	-	222	41,6
60	89	11,1	100	11,1	-	-	130	17,4	-	-	160	25,4	-	-	-	-	187,5	35,1	-	-	220	40,9
64	-	-	98	10,56	-	-	128	16,9	-	-	158	24,8	-	-	-	-	185,5	34,4	-	-	218	40,1
65	-	-	-	-	-	-	127,5	16,7	-	-	157,5	24,62	-	-	-	-	185	34,2	-	-	217,5	39,9
68	-	-	-	-	-	-	126	16,3	-	-	156	24,1	-	-	-	-	183,5	33,7	-	-	216	39,4
71	-	-	-	-	-	-	124,5	15,9	-	-	154,5	23,6	-	-	-	-	182	33,2	-	-	214,5	38,8
75	-	-	-	-	-	-	122,5	15,3	-	-	152,5	23,0	-	-	-	-	180	32,5	-	-	212,5	38,0
76	-	-	-	-	-	-	122	15,2	-	-	152	22,8	-	-	-	-	179,5	32,3	-	-	212	37,9
80	-	-	-	-	-	-	120	14,6	-	-	150	22,2	-	-	-	-	177,5	31,6	-	-	210	37,1
81	-	-	-	-	-	-	-	-	-	-	149,5	22,0	-	-	-	-	177	31,4	-	-	209,5	36,9
85	-	-	-	-	-	-	-	-	-	-	147,5	21,4	-	-	-	-	175	30,7	-	-	207,5	36,2
89	-	-	-	-	-	-	-	-	-	-	145,5	20,8	-	-	-	-	173	30,0	-	-	205,5	35,5
93	-	-	-	-	-	-	-	-	-	-	143,5	20,1	-	-	-	-	171	29,4	-	-	203,5	34,8
97	-	-	-	-	-	-	-	-	-	-	141,5	19,5	-	-	-	-	169	28,7	-	-	201,5	34,0
100	-	-	-	-	90	9,7	-	-	-	-	140	19,1	-	-	-	-	167,5	28,2	-	-	200	33,5
101	-	-	-	-	-	-	-	-	-	-	-	-	-	-	-	-	167	28,0	-	-	199,5	33,3
105	-	-	-	-	-	-	-	-	-	-	-	-	-	-	-	-	165	27,3	-	-	197,5	32,6
109	-	-	-	-	-	-	-	-	-	-	-	-	-	-	-	-	163	26,7	-	-	195,5	31,9
113	-	-	-	-	-	-	-	-	-	-	-	-	-	-	-	-	161	26,0	-	-	193,5	31,2
117	-	-	-	-	-	-	-	-	-	-	-	-	-	-	-	-	159	25,4	-	-	191,5	30,5
120	-	-	-	-	-	-	-	-	119	13,7	-	-	-	-	-	-	157,5	24,9	-	-	190	30,0
124	-	-	-	-	-	-	-	-	-	-	-	-	-	-	-	-	-	-	-	-	188	29,32
127	-	-	-	-	-	-	-	-	-	-	-	-	126,5	15,2	-	-	-	-	-	-	186,5	28,81
128	-	-	-	-	-	-	-	-	-	-	-	-	-	-	-	-	-	-	-	-	186	28,65
132	-	-	-	-	-	-	-	-	-	-	-	-	-	-	-	-	-	-	-	-	184	27,98
136	-	-	-	-	-	-	-	-	-	-	-	-	-	-	-	-	-	-	-	-	182	27,32
140	-	-	-	-	-	-	-	-	-	-	-	-	-	-	139	18,8	-	-	-	-	180	26,67
150																			142,5	18,2		

For a width between the in the table mentioned $k_{H,1}$ can be calculated by linear interpolation.

Table C3	$k_{H,1}$ for Joist Hanger BSD and BSDI 80 mm ≤ Width (B) ≤ 250 mm Full nailing - downward force			
Height H (mm)	$K_{h,1}$	Nails/screws n_H (pcs.)	n_J (pcs.)	R[1)] (mm)
100	14,2	16	8	40
120	20,8	20	10	50
140	28,6	24	12	60
160	37,7	28	14	70
180	48,1	32	16	80
200	59,7	36	18	90
220	72,6	40	20	100
240	86,7	44	22	110
260	102,1	48	24	120
280	118,7	52	26	130
300	136,6	56	28	140
320	155,8	60	30	150

Table C5	$k_{H,1}$ for Joist Hanger BSD and BSDI 34 mm ≤ Width (B) ≤ 79 mm Full nailing - downward force			
Height H (mm)	$K_{h,1}$	Nails/screws n_H (pcs.)	n_J (pcs.)	R[1)] (mm)
100	14,5	16	7	40
120	21	20	9	50
140	28,9	24	11	60
160	38	28	13	70
180	48,3	32	15	80
200	60	36	17	90
220	72,8	40	19	100
240	87	44	21	110
260	102,3	48	23	120
280	119	52	25	130
300	136,9	56	27	140
320	156	60	29	150

Table C4	$k_{H,1}$ for Joist Hanger BSD and BSDI 80 mm ≤ Width (B) ≤ 250 mm Partial nailing - downward force			
Height H (mm)	$K_{h,1}$	Nails/screws n_H (pcs.)	n_J (pcs.)	R[1)] (mm)
100	9,5	8	4	30
120	12,8	10	6	50
140	17,6	12	6	50
160	22,2	14	8	70
180	28,3	16	8	70
200	34,2	18	10	90
220	41,5	20	10	90
240	48,6	22	12	110
260	57,2	24	12	110
280	65,6	26	14	130
300	75,4	28	14	130
320	85	30	16	150

Table C6	$k_{H,1}$ for Joist Hanger BSD and BSDI 34 mm ≤ Width (B) ≤ 79 mm Partial nailing - downward force			
Height H (mm)	$K_{h,1}$	Nails/screws n_H (pcs.)	n_J (pcs.)	R[1)] (mm)
100	6,6	8	4	35
120	9,9	10	5	46
140	13,9	12	6	55
160	18,4	14	7	66
180	23,6	16	8	75
200	29,4	18	9	86
220	35,9	20	10	95
240	42,9	22	11	105
260	50,6	24	12	115
280	59	26	13	125
300	67,9	28	14	135
320	77,5	30	15	145

[1)] R= Distance between top of the hanger and the center of gravity of the nails.
In the case of intermediate height, $k_{H,1}$ can be calculated by linear interpolation.

Table C5	$k_{H,1}$ for Joist Hanger SAE and SAIX													
	Full nailing - downward force													
	Blank													
	200		250		300		340		380		440		500	
	n_H	n_J	n_H	n_J	n_H	n_J	n_H	n_J	n_H	n_J	n_H	n_J	n_H	n_J
	8	5	12	7	18	10	22	12	22	12	28	15	34	18
Width B [mm]	Height H [mm]	$k_{H,1}$	Height H [mm]	$k_{H,1}$	Height H [mm]	$k_{H,1}$	Height H [mm]	$k_{H,1}$	Height H [mm]	$k_{H,1}$	Height H [mm]	$k_{H,1}$	Height H [mm]	$k_{H,1}$
32	84	11,6	109	18,4	134	31,0	154	41,0	174	51,8	204	71,7	234	94,6
34	83	11,4	108	18,1	133	30,5	153	40,5	173	51,2	203	71,0	233	93,8
36	82	11,1	107	17,7	132	30,1	152	40,0	172	50,7	202	70,3	232	93,0
38	81	10,9	106	17,4	131	29,6	151	39,4	171	50,1	201	69,7	231	92,3
40	80	10,6	105	17,1	130	29,2	150	38,9	170	49,6	200	69,0	230	91,5
42	79	10,4	104	16,8	129	28,7	149	38,4	169	49,0	199	68,3	229	90,7
44	78	10,2	103	16,4	128	28,3	148	37,9	168	48,5	198	67,7	228	89,9
46	77	9,9	102	16,1	127	27,9	147	37,4	167	47,9	197	67,0	227	89,2
48	76	9,7	101	15,8	126	27,4	146	36,9	166	47,4	196	66,4	226	88,4
50	75	9,4	100	15,5	125	27,0	145	36,4	165	46,9	195	65,7	225	87,7
52	74	9,2	99	15,1	124	26,6	144	35,9	164	46,3	194	65,1	224	86,9
54	73	9,0	98	14,8	123	26,1	143	35,4	163	45,8	193	64,4	223	86,1
56	72	8,7	97	14,5	122	25,7	142	34,9	162	45,2	192	63,8	222	85,4
58	71	8,5	96	14,2	121	25,3	141	34,4	161	44,7	191	63,1	221	84,6
60	70	8,3	95	13,9	120	24,8	140	33,9	160	44,2	190	62,5	220	83,9
62	69	8,0	94	13,6	119	24,4	139	33,4	159	43,6	189	61,8	219	83,1
64	68	7,8	93	13,3	118	24,0	138	32,9	158	43,1	188	61,2	218	82,4
66	67	7,6	92	13,0	117	23,6	137	32,4	157	42,6	187	60,6	217	81,6
68	66	7,3	91	12,7	116	23,2	136	31,9	156	42,1	186	59,9	216	80,9
70	65	7,1	90	12,3	115	22,8	135	31,4	155	41,5	185	59,3	215	80,1
72	64	6,9	89	12,0	-	-	-	-	154	41,0	184	58,6	214	79,4
74	63	6,7	88	11,7	-	-	-	-	153	40,5	183	58,0	213	78,6
76	62	6,4	87	11,4	-	-	-	-	152	40,0	182	57,4	212	77,9
78	61	6,2	86	11,2	-	-	-	-	151	39,4	181	56,8	211	77,2
80	60	6,0	85	10,9	-	-	-	-	150	38,9	180	56,1	210	76,4
82	-	-	-	-	-	-	-	-	149	38,4	179	55,5	209	75,7
84	-	-	-	-	-	-	-	-	148	37,9	178	54,9	208	75,0
86	-	-	-	-	-	-	-	-	147	37,4	177	54,3	207	74,2
88	-	-	-	-	-	-	-	-	146	36,9	176	53,6	206	73,5
90	-	-	-	-	-	-	-	-	145	36,4	175	53,0	205	72,8
92	-	-	-	-	-	-	-	-	144	35,9	174	52,4	204	72,1
94	-	-	-	-	-	-	-	-	143	35,4	173	51,8	203	71,3
96	-	-	-	-	-	-	-	-	142	34,9	172	51,2	202	70,6
98	-	-	-	-	-	-	-	-	141	34,4	171	50,6	201	69,9
100	-	-	-	-	-	-	-	-	140	33,9	170	50,0	200	69,2
102	-	-	-	-	-	-	-	-	139	33,4	169	49,4	199	68,5
104	-	-	-	-	-	-	-	-	138	32,9	168	48,8	198	67,8
106	-	-	-	-	-	-	-	-	137	32,4	167	48,2	197	67,1
108	-	-	-	-	-	-	-	-	136	31,9	166	47,6	196	66,4
110	-	-	-	-	-	-	-	-	135	31,4	165	47,0	195	65,7

For a width between in the table mentioned $k_{H,1}$ can be calculated by linear interpolation.

Table C6	$k_{H,1}$ for Joist Hanger SAE and SAIX													
	Partial nailing - downward force													
	Blank													
	200		250		300		340		380		440		500	
	n_H	n_J	n_H	n_J	n_H	n_J	n_H	n_J	n_H	n_J	n_H	n_J	n_H	n_J
	4	3	6	4	10	6	12	6	12	6	14	8	18	10
Width B [mm]	Height H [mm]	$k_{H,1}$	Height H [mm]	$k_{H,1}$	Height H [mm]	$k_{H,1}$	Height H [mm]	$k_{H,1}$	Height H [mm]	$k_{H,1}$	Height H [mm]	$k_{H,1}$	Height H [mm]	$k_{H,1}$
32	84	7,7	109	11,7	134	22,3	154	25,0	174,0	31,4	204	41,2	234	58,6
34	83	7,5	108	11,5	133	22,0	153	24,7	173,0	31,1	203	40,8	233	58,2
36	82	7,4	107	11,3	132	21,7	152	24,4	172,0	30,7	202	40,5	232	57,7
38	81	7,2	106	11,1	131	21,4	151	24,1	171,0	30,4	201	40,1	231	57,2
40	80	7,1	105	10,9	130	21,1	150	23,8	170,0	30,1	200	39,7	230	56,8
42	79	7,0	104	10,7	129	20,8	149	23,5	169,0	29,8	199	39,4	229	56,3
44	78	6,8	103	10,6	128	20,6	148	23,2	168,0	29,4	198,0	39,0	228,0	55,9
46	77	6,7	102	10,4	127	20,3	147	22,9	167,0	29,1	197	38,7	227	55,4
48	76	6,5	101	10,2	126	20,0	146	22,6	166,0	28,8	196,0	38,3	226,0	55,0
50	75	6,4	100	10,0	125	19,7	145	22,3	165,0	28,5	195,0	37,9	225,0	54,5
52	74	6,3	99	9,8	124	19,4	144	22,0	164,0	28,2	194	37,6	224	54,1
54	73	6,1	98	9,6	123	19,1	143	21,7	163,0	27,8	193	37,2	223	53,6
56	72	6,0	97	9,4	122	18,9	142	21,4	162,0	27,5	192,0	36,9	222,0	53,2
58	71	5,8	96	9,3	121	18,6	141	21,1	161,0	27,2	191,0	36,5	221,0	52,7
60	70	5,7	95	9,1	120	18,3	140	20,8	160,0	26,9	190,0	36,2	220,0	52,3
62	69	5,6	94	8,9	119	18,0	139	20,5	159,0	26,6	189,0	35,8	219,0	51,8
64	68	5,4	93	8,7	118	17,7	138	20,2	158,0	26,3	188,0	35,5	218,0	51,4
66	67	5,3	92	8,5	117	17,4	137	19,9	157,0	25,9	187	35,1	217	50,9
68	66	5,2	91	8,4	116	17,2	136	19,6	156,0	25,6	186,0	34,7	216,0	50,5
70	65	5,0	90	8,2	115	16,9	135	19,3	155,0	25,3	185,0	34,4	215,0	50,0
72	64	4,9	89	8,0	-	-	-	-	154,0	25,0	184,0	34,0	214,0	49,6
74	63	4,7	88	7,8	-	-	-	-	153,0	24,7	183,0	33,7	213,0	49,2
76	62	4,6	87	7,6	-	-	-	-	152,0	24,4	182,0	33,4	212,0	48,7
78	61	4,5	86	7,5	-	-	-	-	151,0	24,1	181	33,0	211	48,3
80	60	4,3	85	7,3	-	-	-	-	150,0	23,8	180	32,7	210	47,8
82	-	-	-	-	-	-	-	-	149,0	23,5	179	32,3	209	47,4
84	-	-	-	-	-	-	-	-	148,0	23,2	178	32,0	208	47,0
86	-	-	-	-	-	-	-	-	147,0	22,9	177	31,6	207	46,5
88	-	-	-	-	-	-	-	-	146,0	22,6	176	31,3	206	46,1
90	-	-	-	-	-	-	-	-	145,0	22,3	175	30,9	205	45,7
92	-	-	-	-	-	-	-	-	144,0	22,0	174	30,6	204	45,2
94	-	-	-	-	-	-	-	-	143,0	21,7	173	30,3	203	44,8
96	-	-	-	-	-	-	-	-	142,0	21,4	172	29,9	202	44,4
98	-	-	-	-	-	-	-	-	141,0	21,1	171	29,6	201	43,9
100	-	-	-	-	-	-	-	-	140,0	20,8	170	29,3	200	43,5
102	-	-	-	-	-	-	-	-	139,0	20,5	169	28,9	199	43,1
104	-	-	-	-	-	-	-	-	138,0	20,2	168	28,6	198	42,7
106	-	-	-	-	-	-	-	-	137,0	19,9	167	28,3	197	42,2
108	-	-	-	-	-	-	-	-	136,0	19,6	166	27,9	196	41,8
110	-	-	-	-	-	-	-	-	135,0	19,3	165	27,6	195	41,4

For a width between in the table mentioned $k_{H,1}$ can be calculated by linear interpolation.

Table C7	$k_{H,1}$ for Joist Hanger SAEL									
	Full nailing - downward force									
	Blank									
	300		340		380		440		500	
	n_H	n_J	n_H	n_J	n_H	n_J	n_H	n_J	n_H	n_J
	16	8	20	10	20	10	26	13	32	16
Width B [mm]	Height H [mm]	$k_{H,1}$	Height H [mm]	$k_{H,1}$	Height H [mm]	$k_{H,1}$	Height H [mm]	$k_{H,1}$	Height H [mm]	$k_{H,1}$
32	134	31,1	154	41,2	174	51,5	204	71,5	234	94,5
34	133	30,6	153	40,7	173	51,0	203	70,9	233	93,8
36	132	30,2	152	40,2	172	50,5	202	70,2	232	93,0
38	131	29,8	151	39,7	171	49,9	201	69,6	231	92,3
40	130	29,4	150	39,2	170	49,4	200	69,0	230	91,5
42	129	29,0	149	38,7	169	48,9	199	68,3	229	90,8
44	128	28,5	148	38,2	168	48,4	198	67,7	228	90,0
46	127	28,1	147	37,7	167	47,9	197	67,0	227	89,3
48	126	27,7	146	37,2	166	47,3	196	66,4	226	88,5
50	125	27,3	145	36,7	165	46,8	195	65,8	225	87,8
52	124	26,9	144	36,2	164	46,3	194	65,1	224	87,0
54	123	26,4	143	35,7	163	45,8	193	64,5	223	86,3
56	122	26,0	142	35,2	162	45,3	192	63,9	222	85,5
58	121	25,6	141	34,7	161	44,8	191	63,2	221	84,8
60	120	25,2	140	34,3	160	44,2	190	62,6	220	84,0
62	119	24,8	139	33,8	159	43,7	189	62,0	219	83,3
64	118	24,4	138	33,3	158	43,2	188	61,4	218	82,6
66	117	24,0	137	32,8	157	42,7	187	60,7	217	81,8
68	116	23,6	136	32,3	156	42,2	186	60,1	216	81,1
70	115	23,2	135	31,9	155	41,7	185	59,5	215	80,4
72	114	22,8	134	31,4	154	41,2	184	58,9	214	79,6
74	113	22,4	133	30,9	153	40,7	183	58,3	213	78,9
76	112	22,0	132	30,4	152	40,2	182	57,6	212	78,2
78	111	21,6	131	30,0	151	39,7	181	57,0	211	77,5
80	110	21,2	130	29,5	150	39,2	180	56,4	210	76,7
82	109	20,8	129	29,0	149	38,7	179	55,8	209	76,0
84	108	20,4	128	28,6	148	38,2	178	55,2	208	75,3
86	107	20,0	127	28,1	147	37,7	177	54,6	207	74,6
88	106	19,6	126	27,7	146	37,2	176	54,0	206	73,9
90	105	19,2	125	27,2	145	36,7	175	53,4	205	73,2
92	104	18,9	124	26,8	144	36,2	174	52,8	204	72,5
94	103	18,5	123	26,3	143	35,7	173	52,2	203	71,7
96	102	18,1	122	25,9	142	35,2	172	51,6	202	71,0
98	101	17,7	121	25,4	141	34,7	171	51,0	201	70,3
100	100	17,4	120	25,0	140	34,3	170	50,4	200	69,6

Table C7	$k_{H,1}$ for Joist Hanger SAEL									
	Full nailing - downward force									
	Blank									
	300		340		380		440		500	
	n_H	n_J	n_H	n_J	n_H	n_J	n_H	n_J	n_H	n_J
	16	8	20	10	20	10	26	13	32	16
Width B [mm]	Height H [mm]	$k_{H,1}$	Height H [mm]	$k_{H,1}$	Height H [mm]	$k_{H,1}$	Height H [mm]	$k_{H,1}$	Height H [mm]	$k_{H,1}$
102	99	17,0	119	24,5	139	33,8	169	49,8	199	68,9
104	98	16,6	118	24,1	138	33,3	168	49,2	198	68,2
106	97	16,3	117	23,7	137	32,8	167	48,6	197	67,5
108	96	15,9	116	23,2	136	32,3	166	48,0	196	66,9
110	95	15,5	115	22,8	135	31,9	165	47,5	195	66,2
112	94	15,2	114	22,4	134	31,4	164	46,9	194	65,5
114	93	14,8	113	22,0	133	30,9	163	46,3	193	64,8
116	92	14,5	112	21,6	132	30,4	162	45,7	192	64,1
118	91	14,2	111	21,1	131	30,0	161	45,1	191	63,4
120	90	13,8	110	20,7	130	29,5	160	44,6	190	62,7
122	-	-	-	-	129	29,0	159	44,0	189	62,1
124	-	-	-	-	128	28,6	158	43,4	188	61,4
126	-	-	-	-	127	28,1	157	42,9	187	60,7
128	-	-	-	-	126	27,7	156	42,3	186	60,1
130	-	-	-	-	125	27,2	155	41,7	185	59,4
132	-	-	-	-	124	26,8	154	41,2	184	58,7
134	-	-	-	-	123	26,3	153	40,6	183	58,1
136	-	-	-	-	122	25,9	152	40,1	182	57,4
138	-	-	-	-	121	25,4	151	39,5	181	56,8
140	-	-	-	-	120	25,0	150	39,0	180	56,1
142	-	-	-	-	119	24,5	149	38,4	179	55,5
144	-	-	-	-	118	24,1	148	37,9	178	54,8
146	-	-	-	-	117	23,7	147	37,4	177	54,2
148	-	-	-	-	116	23,2	146	36,8	176	53,6
150	-	-	-	-	115	22,8	145	36,3	175	52,9
152	-	-	-	-	114	22,4	144	35,8	174	52,3
154	-	-	-	-	113	22,0	143	35,3	173	51,7
156	-	-	-	-	112	21,6	142	34,7	172	51,0
158	-	-	-	-	111	21,1	141	34,2	171	50,4
160	-	-	-	-	110	20,7	140	33,7	170	49,8

In the case of intermediate width, $k_{H,1}$ can be calculated by linear interpolation.

Table C8	$k_{H,1}$ for Joist Hanger SAEL									
	Partial nailing - downward force									
	Blank									
	300		340		380		440		500	
	n_H	n_J	n_H	n_J	n_H	n_J	n_H	n_J	n_H	n_J
	8	4	10	6	10	6	12	7	16	8
Width B [mm]	Height H [mm]	$k_{H,1}$	Height H [mm]	$k_{H,1}$	Height H [mm]	$k_{H,1}$	Height H [mm]	$k_{H,1}$	Height H [mm]	$k_{H,1}$
32	134	18,8	154	24,0	174	29,4	204	38,8	234	55,7
34	133	18,6	153	23,8	173	29,1	203	38,5	233	55,3
36	132	18,3	152	23,5	172	28,8	202	38,2	232	54,9
38	131	18,1	151	23,3	171	28,5	201	37,9	231	54,5
40	130	17,9	150	23,0	170	28,3	200	37,6	230	54,1
42	129	17,6	149	22,8	169	28,0	199	37,3	229	53,7
44	128	17,4	148	22,5	168	27,7	198	37,0	228	53,3
46	127	17,2	147	22,3	167	27,5	197	36,7	227	53,0
48	126	17,0	146	22,0	166	27,2	196	36,4	226	52,6
50	125	16,7	145	21,8	165	26,9	195	36,1	225	52,2
52	124	16,5	144	21,5	164	26,7	194	35,8	224	51,8
54	123	16,3	143	21,3	163	26,4	193	35,5	223	51,5
56	122	16,1	142	21,0	162	26,1	192	35,2	222	51,1
58	121	15,9	141	20,8	161	25,9	191	35,0	221	50,7
60	120	15,6	140	20,5	160	25,6	190	34,7	220	50,3
62	119	15,4	139	20,3	159	25,3	189	34,4	219	50,0
64	118	15,2	138	20,0	158	25,1	188	34,1	218	49,6
66	117	15,0	137	19,8	157	24,8	187	33,8	217	49,2
68	116	14,8	136	19,6	156	24,6	186	33,5	216	48,8
70	115	14,6	135	19,3	155	24,3	185	33,2	215	48,5
72	114	14,3	134	19,1	154	24,0	184	32,9	214	48,1
74	113	14,1	133	18,9	153	23,8	183	32,6	213	47,7
76	112	13,9	132	18,6	152	23,5	182	32,4	212	47,4
78	111	13,7	131	18,4	151	23,3	181	32,1	211	47,0
80	110	13,5	130	18,2	150	23,0	180	31,8	210	46,7
82	109	13,3	129	17,9	149	22,8	179	31,5	209	46,3
84	108	13,1	128	17,7	148	22,5	178	31,2	208	45,9
86	107	12,9	127	17,5	147	22,3	177	30,9	207	45,6
88	106	12,7	126	17,2	146	22,0	176	30,7	206	45,2
90	105	12,5	125	17,0	145	21,8	175	30,4	205	44,9
92	104	12,3	124	16,8	144	21,5	174	30,1	204	44,5
94	103	12,1	123	16,6	143	21,3	173	29,8	203	44,2
96	102	11,9	122	16,4	142	21,0	172	29,6	202	43,8
98	101	11,7	121	16,1	141	20,8	171	29,3	201	43,5
100	100	11,5	120	15,9	140	20,5	170	29,0	200	43,1

Table C8	$k_{H,1}$ for Joist Hanger SAEL									
	Partial nailing - downward force									
	Blank									
	300		340		380		440		500	
	n_H	n_J	n_H	n_J	n_H	n_J	n_H	n_J	n_H	n_J
	8	4	10	6	10	6	12	7	16	8
Width B [mm]	Height H [mm]	$k_{H,1}$	Height H [mm]	$k_{H,1}$	Height H [mm]	$k_{H,1}$	Height H [mm]	$k_{H,1}$	Height H [mm]	$k_{H,1}$
102	99	11,3	119	15,7	139	20,3	169	28,8	199	42,8
104	98	11,1	118	15,5	138	20,0	168	28,5	198	42,4
106	97	11,0	117	15,3	137	19,8	167	28,2	197	42,1
108	96	10,8	116	15,1	136	19,6	166	28,0	196	41,7
110	95	10,6	115	14,9	135	19,3	165	27,7	195	41,4
112	94	10,4	114	14,7	134	19,1	164	27,4	194	41,1
114	93	10,3	113	14,5	133	18,9	163	27,2	193	40,7
116	92	10,1	112	14,3	132	18,6	162	26,9	192	40,4
118	91	9,9	111	14,1	131	18,4	161	26,6	191	40,1
120	90	9,7	110	13,9	130	18,2	160	26,4	190	39,7
122	-	-	-	-	129	17,9	159	26,1	189	39,4
124	-	-	-	-	128	17,7	158	25,9	188	39,1
126	-	-	-	-	127	17,5	157	25,6	187	38,7
128	-	-	-	-	126	17,2	156	25,4	186	38,4
130	-	-	-	-	125	17,0	155	25,1	185	38,1
132	-	-	-	-	124	16,8	154	24,9	184	37,8
134	-	-	-	-	123	16,6	153	24,6	183	37,5
136	-	-	-	-	122	16,4	152	24,4	182	37,1
138	-	-	-	-	121	16,1	151	24,2	181	36,8
140	-	-	-	-	120	15,9	150	23,9	180	36,5
142	-	-	-	-	119	15,7	149	23,7	179	36,2
144	-	-	-	-	118	15,5	148	23,5	178	35,9
146	-	-	-	-	117	15,3	147	23,2	177	35,6
148	-	-	-	-	116	15,1	146	23,0	176	35,3
150	-	-	-	-	115	14,9	145	22,8	175	35,0
152	-	-	-	-	114	14,7	144	22,5	174	34,7
154	-	-	-	-	113	14,5	143	22,3	173	34,4
156	-	-	-	-	112	14,3	142	22,1	172	34,1
158	-	-	-	-	111	14,1	141	21,9	171	33,8
160	-	-	-	-	110	13,9	140	21,7	170	33,5

In the case of intermediate width, $k_{H,1}$ can be calculated by linear interpolation.

Table C9	$k_{H,1}$ for Joist Hanger SAI 64-80													
	Full nailing - downward force													
	Blank													
	200		250		300		340		380		440		500	
	n_H	n_J	n_H	n_J	n_H	n_J	n_H	n_J	n_H	n_J	n_H	n_J	n_H	n_J
	6	4	10	6	15	10	15	10	18	12	23	14	28	18
Width B [mm]	Height H [mm]	$k_{H,1}$	Height H [mm]	$k_{H,1}$	Height H [mm]	$k_{H,1}$	Height H [mm]	$k_{H,1}$	Height H [mm]	$k_{H,1}$	Height H [mm]	$k_{H,1}$	Height H [mm]	$k_{H,1}$
64	68	6,5	93	11,6	118,0	19,0	138	29,8	158	39,6	188	49,4	218	64,1
66	67	6,4	92	11,3	117,0	18,7	137	29,5	157	39,2	187	48,9	217	63,5
68	66	6,2	91	11,1	116,0	18,4	136	29,1	156	38,8	186	48,3	216	62,9
70	65	6,0	90	10,8	115,0	18,0	135	28,7	155	38,3	185	47,8	215	62,3
72	64	5,8	89	10,6	114,0	17,7	134	28,3	154	37,9	184	47,3	214	61,7
74	63	5,6	88	10,3	113,0	17,4	133	28,0	153	37,5	183	46,8	213	61,2
76	62	5,5	87	10,1	112,0	17,0	132,0	27,6	152,0	37,0	182,0	46,3	212,0	60,6
78	61	5,3	86	9,8	111,0	16,7	131	27,2	151	36,6	181	45,8	211	60,0
80	60	5,1	85	9,6	110,0	16,4	130,0	26,8	150,0	36,2	180,0	45,3	210,0	59,4
82	-	-	-	-	109,0	16,1	129,0	26,5	149,0	35,8	179,0	44,8	209,0	58,8
84	-	-	-	-	108,0	15,7	128	26,1	148	35,3	178	44,3	208	58,3
86	-	-	-	-	107,0	15,4	127	25,7	147	34,9	177	43,8	207	57,7
88	-	-	-	-	106,0	15,1	126,0	25,4	146,0	34,5	176,0	43,3	206,0	57,1
90	-	-	-	-	105,0	14,8	125,0	25,0	145,0	34,1	175,0	42,8	205,0	56,5
92	-	-	-	-	104,0	14,5	124,0	24,6	144,0	33,6	174,0	42,3	204,0	56,0
94	-	-	-	-	103,0	14,2	123,0	24,3	143,0	33,2	173,0	41,8	203,0	55,4
96	-	-	-	-	102,0	13,9	122,0	23,9	142,0	32,8	172,0	41,4	202,0	54,8
98	-	-	-	-	101,0	13,6	121	23,5	141	32,4	171	40,9	201	54,3
100	-	-	-	-	100,0	13,3	120,0	23,2	140,0	32,0	170,0	40,4	200,0	53,7
102	-	-	-	-	99,0	13,0	119,0	22,8	139,0	31,6	169,0	39,9	199,0	53,2
104	-	-	-	-	98,0	12,7	118,0	22,5	138,0	31,2	168,0	39,4	198,0	52,6
106	-	-	-	-	97,0	12,4	117,0	22,1	137,0	30,7	167,0	38,9	197,0	52,1
108	-	-	-	-	96,0	12,1	116,0	21,8	136,0	30,3	166,0	38,5	196,0	51,5
110	-	-	-	-	95,0	11,9	115	21,4	135	29,9	165	38,0	195	51,0
112	-	-	-	-	94,0	11,6	114	21,1	134	29,5	164	37,5	194	50,4
114	-	-	-	-	93,0	11,3	113	20,7	133	29,1	163	37,0	193	49,9
116	-	-	-	-	92,0	11,1	112	20,4	132	28,7	162	36,6	192	49,3
118	-	-	-	-	91,0	10,8	111	20,0	131	28,3	161	36,1	191	48,8
120	-	-	-	-	90,0	10,5	110	19,7	130	27,9	160	35,7	190	48,3

Table C10	$k_{H,1}$ for Joist Hanger SAI 64-80											
	Partial nailing - downward force											
	Blank											
	250		300		340		380		440		500	
	n_H	n_J	n_H	n_J	n_H	n_J	n_H	n_J	n_H	n_J	n_H	n_J
	6	4	10	6	10	6	12	6	14	8	18	10
Width B [mm]	Height H [mm]	$k_{H,1}$	Height H [mm]	$k_{H,1}$	Height H [mm]	$k_{H,1}$	Height H [mm]	$k_{H,1}$	Height H [mm]	$k_{H,1}$	Height H [mm]	$k_{H,1}$
64	93	9,0	118	14,0	138	19,0	158	25,0	188	33,9	218	44,7
66	92	8,8	117	13,8	137	18,7	157	24,7	187	33,5	217	44,3
68	91	8,6	116	13,5	136	18,5	156	24,4	186	33,2	216	43,9
70	90	8,4	115	13,3	135	18,2	155	24,1	185	32,8	215	43,5
72	89	8,3	114	13,1	134	18,0	154	23,8	184	32,5	214	43,1
74	88	8,1	113	12,8	133	17,7	153	23,5	183	32,2	213	42,7
76	87	7,9	112	12,6	132,0	17,4	152,0	23,2	182,0	31,8	212,0	42,3
78	86	7,7	111	12,4	131	17,2	151	23,0	181	31,5	211	41,9
80	85	7,6	110	12,2	130,0	16,9	150,0	22,7	180,0	31,2	210,0	41,5
82	-	-	109	11,9	129,0	16,7	149,0	22,4	179,0	30,8	209,0	41,1
84	-	-	108	11,7	128	16,4	148	22,1	178	30,5	208	40,7
86	-	-	107	11,5	127	16,2	147	21,8	177	30,2	207	40,4
88	-	-	106	11,3	126,0	15,9	146,0	21,5	176,0	29,9	206,0	40,0
90	-	-	105	11,1	125,0	15,7	145,0	21,2	175,0	29,5	205,0	39,6
92	-	-	104	10,9	124,0	15,5	144,0	20,9	174,0	29,2	204,0	39,2
94	-	-	103	10,6	123,0	15,2	143,0	20,6	173,0	28,9	203,0	38,8
96	-	-	102	10,4	122,0	15,0	142,0	20,3	172,0	28,5	202,0	38,4
98	-	-	101	10,2	121	14,7	141	20,1	171	28,2	201	38,1
100	-	-	100	10,0	120,0	14,5	140,0	19,8	170,0	27,9	200,0	37,7
102	-	-	99	9,8	119,0	14,2	139,0	19,5	169,0	27,6	199,0	37,3
104	-	-	98	9,6	118,0	14,0	138,0	19,2	168,0	27,3	198,0	36,9
106	-	-	97	9,4	117,0	13,8	137,0	18,9	167,0	26,9	197,0	36,6
108	-	-	96	9,2	116,0	13,5	136,0	18,7	166,0	26,6	196,0	36,2
110	-	-	95	9,0	115	13,3	135	18,4	165	26,3	195	35,8
112	-	-	94	8,9	114	13,1	134	18,1	164	26,0	194	35,5
114	-	-	93	8,7	113	12,8	133	17,8	163	25,7	193	35,1
116	-	-	92	8,5	112	12,6	132	17,6	162	25,4	192	34,7
118	-	-	91	8,3	111	12,4	131	17,3	161	25,1	191	34,4
120	-	-	90	8,1	110	12,2	130	17,0	160	24,8	190	34,0

In the case of intermediate width, $k_{H,1}$ can be calculated by linear interpolation.

Table C11	$k_{H,1}$ for Joist Hanger SAI 38-63			
	Full nailing - downward force			
	Blank			
	200		250	
	n_H	n_J	n_H	n_J
	4	4	6	6
Width B [mm]	Height H [mm]	$k_{H,1}$	Height H [mm]	$k_{H,1}$
38	81	5,2	106	8,1
40	80	5,0	105	7,9
42	79	4,9	104	7,8
44	78	4,8	103	7,6
46	77	4,7	102	7,5
48	76	4,5	101	7,3
50	75	4,4	100	7,1
52	74	4,3	99	7,0
54	73	4,2	98	6,8
56	72	4,0	97	6,7
58	71	3,9	96	6,5
60	70	3,8	95	6,4
62	69	3,7	94	6,2
63	69	3,6	94	6,1

In the case of intermediate width, $k_{H,1}$ can be calculated by linear interpolation.

Table C12	$k_{H,1}$ for Joist Hanger SAIL 38-79									
	Full nailing - downward force									
	Blank									
	300		340		380		440		500	
	n_H	n_J	n_H	n_J	n_H	n_J	n_H	n_J	n_H	n_J
	8	8	10	10	10	10	12	13	16	16
Width B [mm]	Height H [mm]	$k_{H,1}$	Height H [mm]	$k_{H,1}$	Height H [mm]	$k_{H,1}$	Height H [mm]	$k_{H,1}$	Height H [mm]	$k_{H,1}$
38	131,0	16,6	151,0	21,8	171,0	27,1	201,0	36,6	231,0	49,1
40	130,0	16,4	150,0	21,6	170,0	26,8	200,0	36,2	230,0	48,7
42	129,0	16,2	149,0	21,3	169,0	26,5	199,0	35,9	229,0	48,3
44	128,0	15,9	148,0	21,1	168,0	26,3	198,0	35,6	228,0	47,9
46	127,0	15,7	147,0	20,8	167,0	26,0	197,0	35,3	227,0	47,6
48	126,0	15,5	146,0	20,5	166,0	25,7	196,0	35,0	226,0	47,2
50	125,0	15,3	145,0	20,3	165,0	25,5	195,0	34,7	225,0	46,8
52	124,0	15,1	144,0	20,0	164,0	25,2	194,0	34,4	224,0	46,4
54	123,0	14,9	143,0	19,8	163,0	25,0	193,0	34,1	223,0	46,0
56	122,0	14,7	142,0	19,5	162,0	24,7	192,0	33,8	222,0	45,7
58	121,0	14,4	141,0	19,3	161,0	24,4	191,0	33,5	221,0	45,3
60	120,0	14,2	140,0	19,0	160,0	24,2	190,0	33,2	220,0	44,9
62	119,0	14,0	139,0	18,8	159,0	23,9	189,0	32,9	219,0	44,5
64	118,0	13,8	138,0	18,5	158,0	23,6	188,0	32,6	218,0	44,1
66	117,0	13,6	137,0	18,3	157,0	23,4	187,0	32,3	217,0	43,8
68	116,0	13,4	136,0	18,0	156,0	23,1	186,0	32,0	216,0	43,4
70	115,0	13,2	135,0	17,8	155,0	22,9	185,0	31,7	215,0	43,0
72	114,0	13,0	134,0	17,5	154,0	22,6	184,0	31,4	214,0	42,6
74	113,0	12,8	133,0	17,3	153,0	22,3	183,0	31,1	213,0	42,3
76	112,0	12,5	132,0	17,0	152,0	22,1	182,0	30,8	212,0	41,9
78	111,0	12,3	131,0	16,8	151,0	21,8	181,0	30,5	211,0	41,5
80	110,0	12,1	130,0	16,6	150,0	21,6	180,0	30,2	210,0	41,2

In the case of intermediate width, $k_{H,1}$ can be calculated by linear interpolation.

Table C13	$k_{H,1}$ for Joist Hanger SAIL 38-79									
	Partial nailing - downward force									
	Blank									
	300		340		380		440		500	
	n_H	n_J	n_H	n_J	n_H	n_J	n_H	n_J	n_H	n_J
	8	4	10	6	10	6	12	7	16	8
Width B [mm]	Height H [mm]	$k_{H,1}$	Height H [mm]	$k_{H,1}$	Height H [mm]	$k_{H,1}$	Height H [mm]	$k_{H,1}$	Height H [mm]	$k_{H,1}$
38	131	18,8	151	23,5	171	29,1	201	39,4	231	52,9
40	130	18,5	150	23,2	170	28,8	200	39,1	230	52,5
42	129	18,3	149	22,9	169	28,6	199	38,8	229	52,1
44	128	18,0	148	22,6	168	28,3	198	38,4	228	51,6
46	127	17,8	147	22,4	167	28,0	197	38,1	227	51,2
48	126	17,5	146	22,1	166	27,7	196	37,8	226	50,8
50	125	17,3	145	21,8	165	27,4	195	37,4	225	50,4
52	124	17,1	144	21,5	164	27,1	194	37,1	224	50,0
54	123	16,8	143	21,3	163	26,8	193	36,8	223	49,6
56	122	16,6	142	21,0	162	26,6	192	36,5	222	49,2
58	121	16,3	141	20,7	161	26,3	191	36,1	221	48,8
60	120	16,1	140	20,5	160	26,0	190	35,8	220	48,4
62	119	15,9	139	20,2	159	25,7	189	35,5	219	48,0
64	118	15,6	138	19,9	158	25,4	188	35,1	218	47,6
66	117	15,4	137	19,7	157	25,1	187	34,8	217	47,1
68	116	15,1	136	19,4	156	24,9	186	34,5	216	46,7
70	115	14,9	135	19,1	155	24,6	185	34,2	215	46,3
72	114	14,7	134	18,9	154	24,3	184	33,8	214	45,9
74	113	14,4	133	18,6	153	24,0	183	33,5	213	45,5
76	112	14,2	132	18,3	152	23,8	182	33,2	212	45,1
78	111	14,0	131	18,1	151	23,5	181	32,9	211	44,7
80	110	13,7	130	17,8	150	23,2	180	32,5	210	44,3

In the case of intermediate width, $k_{H,1}$ can be calculated by linear interpolation.

Table C14	$k_{H,1}$ for Joist Hanger SAIL 80-160									
	Full nailing - downward force									
	Blank									
	300		340		380		440		500	
	n_H	n_J	n_H	n_J	n_H	n_J	n_H	n_J	n_H	n_J
	16	8	20	10	20	10	26	13	32	16
Width B [mm]	Height H [mm]	$k_{H,1}$	Height H [mm]	$k_{H,1}$	Height H [mm]	$k_{H,1}$	Height H [mm]	$k_{H,1}$	Height H [mm]	$k_{H,1}$
80	110,0	21,2	130,0	29,5	150,0	39,2	180,0	56,4	210,0	76,7
82	109,0	20,8	129,0	29,0	149,0	38,7	179,0	55,8	209,0	76,0
84	108,0	20,4	128,0	28,6	148,0	38,2	178,0	55,2	208,0	75,3
86	107,0	20,0	127,0	28,1	147,0	37,7	177,0	54,6	207,0	74,6
88	106,0	19,6	126,0	27,7	146,0	37,2	176,0	54,0	206,0	73,9
90	105,0	19,2	125,0	27,2	145,0	36,7	175,0	53,4	205,0	73,2
92	104,0	18,9	124,0	26,8	144,0	36,2	174,0	52,8	204,0	72,5
94	103,0	18,5	123,0	26,3	143,0	35,7	173,0	52,2	203,0	71,7
96	102,0	18,1	122,0	25,9	142,0	35,2	172,0	51,6	202,0	71,0
98	101,0	17,7	121,0	25,4	141,0	34,7	171,0	51,0	201,0	70,3
100	100,0	17,4	120,0	25,0	140,0	34,3	170,0	50,4	200,0	69,6
102	99,0	17,0	119,0	24,5	139,0	33,8	169,0	49,8	199,0	68,9
104	98,0	16,6	118,0	24,1	138,0	33,3	168,0	49,2	198,0	68,2
106	97,0	16,3	117,0	23,7	137,0	32,8	167,0	48,6	197,0	67,5
108	96,0	15,9	116,0	23,2	136,0	32,3	166,0	48,0	196,0	66,9
110	95,0	15,5	115,0	22,8	135,0	31,9	165,0	47,5	195,0	66,2
112	-	-	-	-	134,0	31,4	164,0	46,9	194,0	65,5
114	-	-	-	-	133,0	30,9	163,0	46,3	193,0	64,8
116	-	-	-	-	132,0	30,4	162,0	45,7	192,0	64,1
118	-	-	-	-	131,0	30,0	161,0	45,1	191,0	63,4
120	-	-	-	-	130,0	29,5	160,0	44,6	190,0	62,7
122	-	-	-	-	129,0	29,0	159,0	44,0	189,0	62,1
124	-	-	-	-	128,0	28,6	158,0	43,4	188,0	61,4
126	-	-	-	-	127,0	28,1	157,0	42,9	187,0	60,7
128	-	-	-	-	126,0	27,7	156,0	42,3	186,0	60,1
130	-	-	-	-	125,0	27,2	155,0	41,7	185,0	59,4
132	-	-	-	-	124,0	26,8	154,0	41,2	184,0	58,7
134	-	-	-	-	123,0	26,3	153,0	40,6	183,0	58,1
136	-	-	-	-	122,0	25,9	152,0	40,1	182,0	57,4
138	-	-	-	-	121,0	25,4	151,0	39,5	181,0	56,8
140	-	-	-	-	120,0	25,0	150,0	39,0	180,0	56,1
142	-	-	-	-	119,0	24,5	149,0	38,4	179,0	55,5
144	-	-	-	-	118,0	24,1	148,0	37,9	178,0	54,8
146	-	-	-	-	117,0	23,7	147,0	37,4	177,0	54,2
148	-	-	-	-	116,0	23,2	146,0	36,8	176,0	53,6
150	-	-	-	-	115,0	22,8	145,0	36,3	175,0	52,9
152	-	-	-	-	114,0	22,4	144,0	35,8	174,0	52,3
154	-	-	-	-	113,0	22,0	143,0	35,3	173,0	51,7
156	-	-	-	-	112,0	21,6	142,0	34,7	172,0	51,0
158	-	-	-	-	111,0	21,1	141,0	34,2	171,0	50,4
160	-	-	-	-	110,0	20,7	140,0	33,7	170,0	49,8

In the case of intermediate width, $k_{H,1}$ can be calculated by linear interpolation.

Table C15	$k_{H,1}$ for Joist Hanger SAIL 80-160									
	Partial nailing - downward force									
	Blank									
	300		340		380		440		500	
	n_H	n_J	n_H	n_J	n_H	n_J	n_H	n_J	n_H	n_J
	8	4	10	6	10	6	12	7	16	8
Width B [mm]	Height H [mm]	$k_{H,1}$	Height H [mm]	$k_{H,1}$	Height H [mm]	$k_{H,1}$	Height H [mm]	$k_{H,1}$	Height H [mm]	$k_{H,1}$
80	108	13,0	128	17,6	148	22,4	180,0	31,8	210,0	46,7
82	107	12,8	127	17,4	147	22,1	179,0	31,5	209,0	46,3
84	106	12,6	126	17,1	146	21,9	178,0	31,2	208,0	45,9
86	104,5	12,4	124,5	16,9	144,5	21,6	177	30,9	207	45,6
88	103,5	12,2	123,5	16,7	143,5	21,4	176	30,7	206	45,2
90	102,5	12,0	122,5	16,5	142,5	21,1	175	30,4	205	44,9
92	101,5	11,8	121,5	16,3	141,5	20,9	174	30,1	204	44,5
94	100,5	11,6	120,5	16,0	140,5	20,6	173	29,8	203	44,2
96	99,5	11,4	119,5	15,8	139,5	20,4	172	29,6	202	43,8
98	98,5	11,2	118,5	15,6	138,5	20,2	171	29,3	201	43,5
100	97,5	11,1	117,5	15,4	137,5	19,9	170	29,0	200	43,1
102	96,5	10,9	116,5	15,2	136,5	19,7	169	28,8	199	42,8
104	95,5	10,7	115,5	15,0	135,5	19,4	168	28,5	198	42,4
106	94,5	10,5	114,5	14,8	134,5	19,2	167	28,2	197	42,1
108	93,5	10,3	113,5	14,6	133,5	19,0	166	28,0	196	41,7
110	92,5	10,2	112,5	14,4	132,5	18,7	165	27,7	195	41,4
112	-	-	-	-	131,5	18,5	164	27,4	194	41,1
114	-	-	-	-	130,5	18,3	163	27,2	193	40,7
116	-	-	-	-	129,5	18,0	162	26,9	192	40,4
118	-	-	-	-	128,5	17,8	161	26,6	191	40,1
120	-	-	-	-	127,5	17,6	160	26,4	190	39,7
122	-	-	-	-	126,5	17,4	159	26,1	189	39,4
124	-	-	-	-	125,5	17,1	158	25,9	188	39,1
126	-	-	-	-	124,5	16,9	157	25,6	187	38,7
128	-	-	-	-	123,5	16,7	156	25,4	186	38,4
130	-	-	-	-	122,5	16,5	155	25,1	185	38,1
132	-	-	-	-	121,5	16,3	154	24,9	184	37,8
134	-	-	-	-	120,5	16,0	153	24,6	183	37,5
136	-	-	-	-	119,5	15,8	152	24,4	182	37,1
138	-	-	-	-	118,5	15,6	151	24,2	181	36,8
140	-	-	-	-	117,5	15,4	150	23,9	180	36,5
142	-	-	-	-	116,5	15,2	149	23,7	179	36,2
144	-	-	-	-	115,5	15,0	148	23,5	178	35,9
146	-	-	-	-	114,5	14,8	147	23,2	177	35,6
148	-	-	-	-	113,5	14,6	146	23,0	176	35,3
150	-	-	-	-	112,5	14,4	145	22,8	175	35,0
152	-	-	-	-	111,5	14,2	144	22,5	174	34,7
154	-	-	-	-	110,5	14,0	143	22,3	173	34,4
156	-	-	-	-	109,5	13,8	142	22,1	172	34,1
158	-	-	-	-	108,5	13,6	141	21,9	171	33,8
160	-	-	-	-	107,5	13,5	140	21,7	170	33,5

In the case of intermediate width, $k_{H,1}$ can be calculated by linear interpolation.

Table C16	$k_{H,1}$ for Joist Hanger SBE											
	Full nailing - downward force											
	Blank											
	230		260		320		380		440		500	
	n_H	n_J	n_H	n_J	n_H	n_J	n_H	n_J	n_H	n_J	n_H	n_J
	12	6	12	8	14	10	18	12	22	14	26	16
Width B [mm]	Height H [mm]	$k_{H,1}$	Height H [mm]	$k_{H,1}$	Height H [mm]	$k_{H,1}$	Height H [mm]	$k_{H,1}$	Height H [mm]	$k_{H,1}$	Height H [mm]	$k_{H,1}$
32	99,0	19,4	114,0	24,1	144,0	37,2	174,0	56,1	204,0	78,9	234,0	104,4
36	97,0	18,6	112,0	23,3	142,0	36,3	172,0	54,9	202,0	77,5	232,0	102,7
40	95,0	17,8	110,0	22,5	140,0	35,4	170,0	53,7	200,0	76,1	230,0	101,1
44	93,0	17,0	108,0	21,7	138,0	34,4	168,0	52,5	198,0	74,6	228,0	99,4
48	91,0	16,3	106,0	20,9	136,0	33,5	166,0	51,4	196,0	73,2	226,0	97,8
52	89,0	15,5	104,0	20,1	134,0	32,6	164,0	50,2	194,0	71,8	224,0	96,2
56	87,0	14,8	102,0	19,4	132,0	31,7	162,0	49,0	192,0	70,4	222,0	94,6
60	85,0	14,0	100,0	18,6	130,0	30,8	160,0	47,9	190,0	69,0	220,0	92,9
64	83,0	13,3	98,0	17,8	128,0	29,9	158,0	46,8	188,0	67,6	218,0	91,3
65	82,5	13,1	97,5	17,7	127,5	29,6	157,5	46,5	187,5	67,3	217,5	90,9
68	-	-	96,0	17,1	126,0	29,0	156,0	45,6	186,0	66,3	216,0	89,7
71	-	-	94,5	16,5	124,5	28,3	154,5	44,8	184,5	65,2	214,5	88,5
75	-	-	-	-	122,5	27,4	152,5	43,6	182,5	63,9	212,5	86,9
76	-	-	-	-	122,0	27,2	152,0	43,4	182,0	63,5	212,0	86,5
80	-	-	-	-	120,0	26,3	150,0	42,2	180,0	62,2	210,0	85,0
81	-	-	-	-	119,5	26,1	149,5	42,0	179,5	61,8	209,5	84,6
85	-	-	-	-	-	-	147,5	40,9	177,5	60,5	207,5	83,0
89	-	-	-	-	-	-	145,5	39,8	175,5	59,1	205,5	81,4
93	-	-	-	-	-	-	143,5	38,7	173,5	57,8	203,5	79,9
97	-	-	-	-	-	-	141,5	37,6	171,5	56,5	201,5	78,3
100	-	-	-	-	-	-	140,0	36,8	170,0	55,5	200,0	77,2
101	-	-	-	-	-	-	139,5	36,5	169,5	55,1	199,5	76,8
105	-	-	-	-	-	-	-	-	167,5	53,8	197,5	75,2
109	-	-	-	-	-	-	-	-	165,5	52,5	195,5	73,7
113	-	-	-	-	-	-	-	-	163,5	51,2	193,5	72,2
117	-	-	-	-	-	-	-	-	161,5	50,0	191,5	70,7
121	-	-	-	-	-	-	-	-	159,5	48,7	189,5	69,2
125	-	-	-	-	-	-	-	-	-	-	187,5	67,7
129	-	-	-	-	-	-	-	-	-	-	185,5	66,3
133	-	-	-	-	-	-	-	-	-	-	183,5	64,8
137	-	-	-	-	-	-	-	-	-	-	181,5	63,3
141	-	-	-	-	-	-	-	-	-	-	179,5	61,9

In the case of intermediate width, $k_{H,1}$ can be calculated by linear interpolation.

Table C17	$k_{H,1}$ for Joist Hanger SBE											
	Partial nailing - downward force											
	Blank											
	230		260		320		380		440		500	
	n_H	n_J	n_H	n_J	n_H	n_J	n_H	n_J	n_H	n_J	n_H	n_J
	8	4	8	4	10	6	12	6	14	8	16	8
Width B [mm]	Height H [mm]	$k_{H,1}$	Height H [mm]	$k_{H,1}$	Height H [mm]	$k_{H,1}$	Height H [mm]	$k_{H,1}$	Height H [mm]	$k_{H,1}$	Height H [mm]	$k_{H,1}$
32	99,0	14,0	114,0	18,0	144,0	27,0	174,0	39,6	204,0	52,4	234,0	69,1
36	97,0	13,4	112,0	17,4	142,0	26,3	172,0	38,7	202,0	51,5	232,0	68,0
40	95,0	12,8	110,0	16,8	140,0	25,6	170,0	37,9	200,0	50,6	230,0	66,9
44	93,0	12,3	108,0	16,2	138,0	24,9	168,0	37,0	198,0	49,6	228,0	65,9
48	91,0	11,7	106,0	15,6	136,0	24,2	166,0	36,2	196,0	48,7	226,0	64,8
52	89,0	11,2	104,0	15,1	134,0	23,5	164,0	35,4	194,0	47,8	224,0	63,7
56	87,0	10,7	102,0	14,5	132,0	22,9	162,0	34,6	192,0	46,8	222,0	62,7
60	85,0	10,1	100,0	13,9	130,0	22,2	160,0	33,8	190,0	45,9	220,0	61,6
64	83,0	9,6	98,0	13,4	128,0	21,5	158,0	33,0	188,0	45,0	218,0	60,6
65	82,5	9,5	97,5	13,2	127,5	21,4	157,5	32,8	187,5	44,8	217,5	60,3
68	-	-	96,0	12,8	126,0	20,9	156,0	32,2	186,0	44,1	216,0	59,5
71	-	-	94,5	12,4	124,5	20,4	154,5	31,6	184,5	43,4	214,5	58,8
75	-	-	-	-	122,5	19,7	152,5	30,8	182,5	42,5	212,5	57,7
76	-	-	-	-	122,0	19,6	152,0	30,6	182,0	42,3	212,0	57,5
80	-	-	-	-	120,0	18,9	150,0	29,8	180,0	41,4	210,0	56,4
81	-	-	-	-	119,5	18,8	149,5	29,6	179,5	41,2	209,5	56,2
85	-	-	-	-	-	-	147,5	28,8	177,5	40,3	207,5	55,1
89	-	-	-	-	-	-	145,5	28,0	175,5	39,4	205,5	54,1
93	-	-	-	-	-	-	143,5	27,3	173,5	38,5	203,5	53,1
97	-	-	-	-	-	-	141,5	26,5	171,5	37,6	201,5	52,1
100	-	-	-	-	-	-	140,0	25,9	170,0	37,0	200,0	51,3
101	-	-	-	-	-	-	139,5	25,8	169,5	36,8	199,5	51,1
105	-	-	-	-	-	-	-	-	167,5	35,9	197,5	50,1
109	-	-	-	-	-	-	-	-	165,5	35,1	195,5	49,1
113	-	-	-	-	-	-	-	-	163,5	34,2	193,5	48,1
117	-	-	-	-	-	-	-	-	161,5	33,4	191,5	47,1
121	-	-	-	-	-	-	-	-	159,5	32,6	189,5	46,2
125	-	-	-	-	-	-	-	-	-	-	187,5	45,2
129	-	-	-	-	-	-	-	-	-	-	185,5	44,2
133	-	-	-	-	-	-	-	-	-	-	183,5	43,3
137	-	-	-	-	-	-	-	-	-	-	181,5	42,3
141	-	-	-	-	-	-	-	-	-	-	179,5	41,4

In the case of intermediate width, $k_{H,1}$ can be calculated by linear interpolation.

Table C18	$k_{H,1}$ and $k_{H,2}$ – Values for Joist hanger SBG																	
	FULL NAIL FIXING																	
	Blank																	
	230			260			320			380			440			500		
Width B [mm]	Depth H [mm]	$k_{H,1}$	$k_{H,2}$	Depth H [mm]	$k_{H,1}$	$k_{H,2}$	Depth H [mm]	$k_{H,1}$	$k_{H,2}$	Depth H [mm]	$k_{H,1}$	$k_{H,2}$	Depth H [mm]	$k_{H,1}$	$k_{H,2}$	Depth H [mm]	$k_{H,1}$	$k_{H,2}$
38	96	-	-	111	-	-	141	-	-	171	-	-	201	-	-	231	-	-
40	95	16,2	10,7	110	22,2	14,6	140	35,1	22,0	170	50,9	30,5	200	70,9	40,7	230	95,9	53,3
44	93	15,5	10,7	108	21,4	14,6	138	34,2	22,0	168	49,8	30,5	198	69,5	40,7	228	94,4	53,3
45	93	15,3	10,7	108	21,2	14,6	138	33,9	22,0	168	49,5	30,5	198	69,2	40,7	228	94,0	53,3
51	90	14,3	10,7	105	20,0	14,6	135	32,4	22,0	165	47,9	30,5	195	67,2	40,7	225	91,6	53,3
55				103	19,2	14,6	133	31,5	22,0	163	46,8	30,5	193	65,9	40,7	223	90,1	53,3
60				100	18,3	14,6	130	30,3	22,0	160	45,4	30,5	190	64,3	40,7	220	88,2	53,3
64				98	17,5	14,6	128	29,3	22,0	158	44,3	30,5	188	63,0	40,7	218	86,6	53,3
70							125	27,9	22,0	155	42,7	30,5	185	61,0	40,7	215	84,3	53,3
74							123	27,0	22,0	153	41,6	30,5	183	59,7	40,7	213	82,8	53,3
78							121	26,1	22,0	151	40,5	30,5	181	58,5	40,7	211	81,3	53,3
80							120	25,6	22,0	150	40,0	30,5	180	57,8	40,7	210	80,6	53,3
90										145	37,4	30,5	175	54,7	40,7	205	76,8	53,3
100										140	34,8	30,5	170	51,6	40,7	200	73,2	53,3
110													165	48,5	40,7	195	69,5	53,3
120													160	45,6	40,7	190	65,9	53,3
130																185	62,4	53,3
140																180	59,0	53,3

In the case of intermediate width, Kh,1 and Kh,2 can be calculated by linear interpolation.

Table C19	$k_{H,1}$ and $k_{H,2}$ – Values for Joist hanger SBG																	
	PARTIAL NAIL FIXING																	
	Blank																	
	230			260			320			380			440			500		
Width B [mm]	Depth H [mm]	$k_{H,1}$	$k_{H,2}$	Depth H [mm]	$k_{H,1}$	$k_{H,2}$	Depth H [mm]	$k_{H,1}$	$k_{H,2}$	Depth H [mm]	$k_{H,1}$	$k_{H,2}$	Depth H [mm]	$k_{H,1}$	$k_{H,2}$	Depth H [mm]	$k_{H,1}$	$k_{H,2}$
38	96	13,8	6,1	111	17,2	9,8	141	25,4	14,4	171	36,4	19,9	201	49,3	26,2	231	64,2	33,4
40	95	13,5	6,1	110	16,9	9,8	140	25,0	14,4	170	36,0	19,9	200	48,9	26,2	230	63,6	33,4
44	93	13,0	6,1	108	16,3	9,8	138	24,3	14,4	168	35,2	19,9	198	48,0	26,2	228	62,6	33,4
45	93	12,9	6,1	108	16,2	9,8	138	24,2	14,4	168	35,0	19,9	198	47,7	26,2	228	62,4	33,4
51	90	12,1	6,1	105	15,3	9,8	135	23,2	14,4	165	33,8	19,9	195	46,4	26,2	225	60,8	33,4
55				103	14,7	9,8	133	22,5	14,4	163	33,0	19,9	193	45,5	26,2	223	59,8	33,4
60				100	14,0	9,8	130	21,7	14,4	160	32,1	19,9	190	44,4	26,2	220	58,6	33,4
64							128	21,0	14,4	158	31,3	19,9	188	43,5	26,2	218	57,6	33,4
70							125	20,1	14,4	155	30,2	19,9	185	42,2	26,2	215	56,1	33,4
74							123	19,4	14,4	153	29,4	19,9	183	41,3	26,2	213	55,1	33,4
78							121	18,8	14,4	151	28,6	19,9	181	40,4	26,2	211	54,1	33,4
80							120	18,5	14,4	150	28,3	19,9	180	40,0	26,2	210	53,6	33,4
90										145	26,4	19,9	175	37,8	26,2	205	51,2	33,4
100										140	24,6	19,9	170	35,7	26,2	200	48,8	33,4
110													165	33,7	26,2	195	46,4	33,4
120													160	31,6	26,2	190	44,1	33,4
130																185	41,8	33,4
140																180	39,5	33,4

In the case of intermediate width, Kh,1 and Kh,2 can be calculated by linear interpolation.

Table C20	$k_{H,1}$ and $k_{H,2}$ – Values for Joist hanger SDED/G FULL NAIL FIXING		
References	**Blank**	**Coefficients**	
		KH,1	**KH,2**
0301000	260	17.7	16.6
0301100	380	51.7	32.8
0310200	440	73.4	37.6
SDED/G	300	24.0	19.9
SDED/G	340	32.9	28.1
SDED/G	380	38.6	28.1
SDED/G	440	55.9	42.9

Table C21	$k_{H,1}$– Values for Joist hanger SAE590 and SAE620 FULL NAIL FIXING					
Blank	**590**		**620**		**620**	
Width	Height	$K_{H,1}$	Height	$K_{H,1}$	Height	$K_{H,1}$
mm	mm		mm		mm	
38			291,0	170,5		
45			287,5	166,5		
50			285,0	163,6		
64			278,0	155,6		
76			272,0	148,8		
100			260,0	135,5		
125					247,5	132,6
150					235,0	119,4
200	195,0	105,0	210,0	85,4		

Annex D
Form factor $k_{H,2}$ for upward force

The form factor $k_{H,2}$ is to be used for calculation of the load-carrying capacity of a wood-wood connection with threaded nails or screws subjected to an upward force away from the bottom plate.

Two nail patterns are specified:

1. Full nailing pattern
   Nails in all holes in the joist hanger.

Partial nailing pattern

The number of nails in the joist and the header has to be at least half the number specified for full nailing. In the header the nails shall be put into the holes closest to the bend line in the hanger. In the joist the nails may be staggered. The upper and lower holes always have to be nailed.

Table D1	**$k_{H,2}$**				
	Full or partial nailing - upward force				
Joist hanger	Blank	Total number of nails in the header		k_{H2}	
		Full nailing	Partial nailing	Full nailing	Partial nailing
Standard	238	14	8	17,2	10,2
	260	16	8	21,4	10,3
	280	14	8	14,9	8,7
	320	20	10	26,6	14,8
	358	18	10	19,4	11,1
	380	24	12	35,0	19,7
	380/127	22	10	31,4	13,8
	418	22	12	31,1	14,0
	440	26	14	36,7	20,3
	440/150	26	14	36,7	20,3
	500	30	16	46,7	25,5
I model 1 Internal flanges	320	20	10	25,5	14,6
	380	24	12	35,0	19,7
	440	26	14	36,7	20,3
	500	30	16	44,9	25,0
I model 2 Internal flanges	238	8		10,0	
	260	8		10,0	
	320	10		12,8	
	380	12		17,6	
	440	14		20,3	
	500	16		25,5	
BSD/BSDI External or internal flanges	H=100	16	8	14,8	7,1
	H=120	20	10	21,6	10,4
	H=140	24	12	29,6	14,3
	H=160	28	14	38,9	18,8
	H=180	32	16	49,4	24,0
	H=200	36	18	61,2	29,8
	H=220	40	20	74,2	36,2
	H=240	44	22	88,5	43,3
	H=260	48	24	104,0	51,0
	H=280	52	26	120,8	59,3
	H=300	56	28	138,8	68,2
	H=320	60	30	158,1	77,8

Table D1	$k_{H,2}$				
	Full or partial nailing - upward force				
Joist hanger	Blank	Total number of nails in the header		k_{H2}	
		Full nailing	Partial nailing	Full nailing	Partial nailing
SAE	200	8	4	5,6	3,0
	250	12	6	10,3	4,2
	300	18	10	19,9	11,4
	340	22	12	28,1	15,8
	380	22	12	28,1	15,8
	440	28	14	42,9	20,4
	500	34	18	60,8	32,9
	590	30	16	81.5	40.9
	260-a	40	20	105.1	48.9
	260-b	40	22	114.7	61.3
SAIX model 1 External or internal flanges	380	22	12	27,4	15,4
	440	28	14	41,8	19,9
	500	34	18	59,3	32,1
SAIX model 2 External or internal flanges	250	6		4,7	
	300	10		11,1	
	340	12		15,4	
	380	12		15,4	
	440	14		20,3	
	500	18		32,1	
SAEL	300	16	8	16,4	7,9
	340	20	10	23,8	11,4
	380	20	10	23,8	11,4
	440	26	12	37,6	21,9
	500	32	16	54,5	25,9
SAI model 1	200	6	4	3,6	2,5
	250	10	4	7,5	2,4
	300	15	8	13,5	7,6
	340	15	8	13,5	7,6
	380	18	10	19,2	12,1
	440	23	12	28,2	15,0
	500	28	14	41,3	19,6
SAI model 2	200	4		2,5	
	250	6		4,7	
SAIL model 1	300	16	8	16,4	7,9
	340	20	10	23,8	11,4
	380	20	10	23,8	11,4
	440	26	14	37,6	21,9
	500	32	16	54,5	25,9
SAIL model 2	300	8		7,8	
	340	10		11,4	
	380	10		11,4	
	440	12		15,8	
	500	16		26,5	
SBE	230	12	8	15,3	10,3
	260	12	8	15,3	10,3
	320	14	10	19,2	15,2
	380	18	12	28,9	20,9
	440	22	14	40,4	27,6
	500	26	16	56,1	35,2
2 parts 0301000	260	16	8	16.58	--
0301100	300	24	12	32.82	-
0301200	440	26	14	37.63	-
SDED/G	300	18	10	19.95	-
SDED/G	340	22	12	28.10	-
SDED/G	380	22	12	28.10	-
SDED/G	440	28	14	42.91	-

Annex E

Effective number of nails $n_{J,ef,1}$ and $n_{J,ef,2}$ for joist hangers nailed with smooth round nails or square twist nails

The effective number of nails $n_{J,ef,1}$ and $n_{J,ef,2}$ shall be used for calculation of the load-carrying capacity of a wood-wood connection with smooth round nails or square twist nails subjected to a downward force towards the bottom plate, respectively an upward force away from the bottom plate.

Two nail patterns are specified:

1. **Full nailing pattern:** Nails in all holes in the joist hanger.
2. **Partial nailing pattern**: The number of nails in the joist and the header has to be at least half the number specified for full nailing. In the header the nails shall be put into the holes closest to the bend line in the hanger. In the joist the nails may be staggered. The upper and lower holes always have to be nailed.

Table E1	**$n_{j,ef,1}$ and $n_{j,ef,2}$**						
Joist hanger	Blank	Total number of nails in the joist		Force downward towards the bottom plate		Force upward away from the bottom plate	
		Full nailing	Partial nailing	Full nailing $n_{J,ef,1}$	Partial nailing $n_{J,ef,1}$	Full nailing $n_{J,ef,2}$	Partial nailing $n_{J,ef,2}$
Standard	238	8	4	3,91	3,21	3,63	2,59
	260	8	4	3,91	3,21	3,63	2,59
	280	8	4	3,38	2,78	3,19	2,35
	320	10	6	5,45	4,01	5,02	3,47
	358	10	6	4,83	3,55	4,52	3,16
	380	12	6	8,04	5,43	7,19	4,27
	380/127	10	6	5,45	4,01	5,02	3,47
	418	12	6	7,12	4,21	6,51	3,60
	440	14	8	9,87	6,47	8,81	5,39
	440/150	12	6	7,19	4,26	6,57	3,63
	500	16	8	12,58	6,84	11,07	5,60
				0,00	0,00	0,00	0,00
I model 1 Internal flanges	320	10	6	5,45	4,01	5,02	3,47
	380	12	6	8,04	5,43	7,19	4,27
	440	14	8	9,87	6,47	8,81	5,39
	500	16	8	12,58	6,84	11,07	5,60
I model 2 Internal flanges	238	8		3,91		3,63	
	260	8		3,91		3,63	
	320	10		5,45		5,02	
	380	12		8,04		7,19	
	440	14		9,87		8,81	
	500	16		12,58		11,07	
BSD or BSDI External or internal flanges	H=100	7	4	2,80	0,95	2,69	0,93
	H=120	9	5	4,56	3,35	4,30	3,02
	H=140	11	6	6,83	4,04	6,29	3,49
	H=160	13	7	9,41	6,16	8,48	5,21
	H=180	15	8	12,17	6,58	10,79	5,46
	H=200	17	9	14,98	9,37	13,13	7,56
	H=220	19	10	17,79	9,55	15,47	7,66
	H=240	21	11	20,55	12,57	17,80	9,91
	H=260	23	12	23,24	12,59	20,10	9,92
	H=280	25	13	25,86	15,58	22,37	12,20
	H=300	27	14	28,40	15,52	24,62	12,17
	H=320	29	15	30,88	18,37	26,84	14,43

Table E1	**$n_{j,ef,1}$ and $n_{j,ef,2}$**						
Joist hanger	Blank	Total number of nails in the joist		Force downward towards the bottom plate		Force upward away from the bottom plate	
		Full nailing	Partial nailing	Full nailing $n_{J,ef,1}$	Partial nailing $n_{J,ef,1}$	Full nailing $n_{J,ef,2}$	Partial nailing $n_{J,ef,2}$
SAE	200	5	4	1,29	1,29	1,26	1,24
	250	7	4	2,84	2,13	2,69	1,92
	300	10	6	6,15	3,90	5,54	3,40
	340	12	6	8,76	4,91	7,69	4,00
	380	12	6	8,76	4,91	7,69	4,00
	440	15	8	12,92	7,59	11,06	5,99
	500	18	10	17,08	10,69	14,46	8,21
	590	20	10	18,46	9,11	15,90	7,42
	620a	22	12	20,67	10,69	17,87	8,90
	620b	22	12	22,35	12,00	18,92	9,62
SAIX model 1 External or internal flanges	380	12	6	8,76	4,91	7,69	4,00
	440	15	8	12,92	7,59	11,06	5,99
	500	18	10	17,08	10,69	14,46	8,21
SAIX model 2 External or internal flanges	250	7	4	2,84	2,13	2,69	1,92
	300	9	6	4,94	3,51	4,52	3,13
	340	11	6	7,43	5,12	6,60	4,12
	380	11	6	7,43	4,56	6,60	3,81
	440	15	8	12,92	7,96	11,06	6,16
	500	18	10	17,08	10,69	14,46	8,21
SAEL	300	8	4	3,83	2,59	3,57	2,23
	340	10	6	6,15	4,22	5,54	3,61
	380	10	6	6,15	4,22	5,54	3,61
	440	13	8	10,13	6,45	8,81	5,38
	500	16	8	14,31	7,78	12,20	6,08
SAI model 1	200	4	4	1,84	1,84	1,70	1,70
	250	6	4	1,91	1,60	1,84	1,51
	300	10	6	5,95	3,77	5,39	3,31
	340	10	6	5,95	5,69	5,39	4,40
	380	12	6	8,50	4,75	7,52	3,92
	440	14	8	11,22	7,21	9,74	5,80
	500	18	8	16,75	10,46	14,27	8,10
SAI model 2	200	4		1,84		1,70	
	250	6		1,91		1,84	
SAIL model 1	300	8	4	3,83	2,59	3,57	2,23
	340	10	6	6,15	4,22	5,54	3,61
	380	10	6	6,15	4,22	5,54	3,61
	440	13	8	10,13	6,45	8,81	5,38
	500	16	8	14,31	7,78	12,20	6,08
SAIL model 2	300	10		6,15		5,54	
	340	10		6,15		5,54	
	380	12		8,76		7,69	
	440	14		11,52		9,93	
	500	18		17,08		14,46	
SBE	230	6	4	2,71	2,66	2,44	2,22
	260	8	4	4,95	2,19	4,41	1,40
	320	10	6	7,74	5,36	6,62	4,04
	380	12	6	10,70	5,36	8,91	4,59
	440	14	8	13,70	8,00	11,21	6,59
	500	16	8	16,00	8,00	13,48	6,23

Annex F
Installation of joist hangers

Joist hanger in wood/wood connection

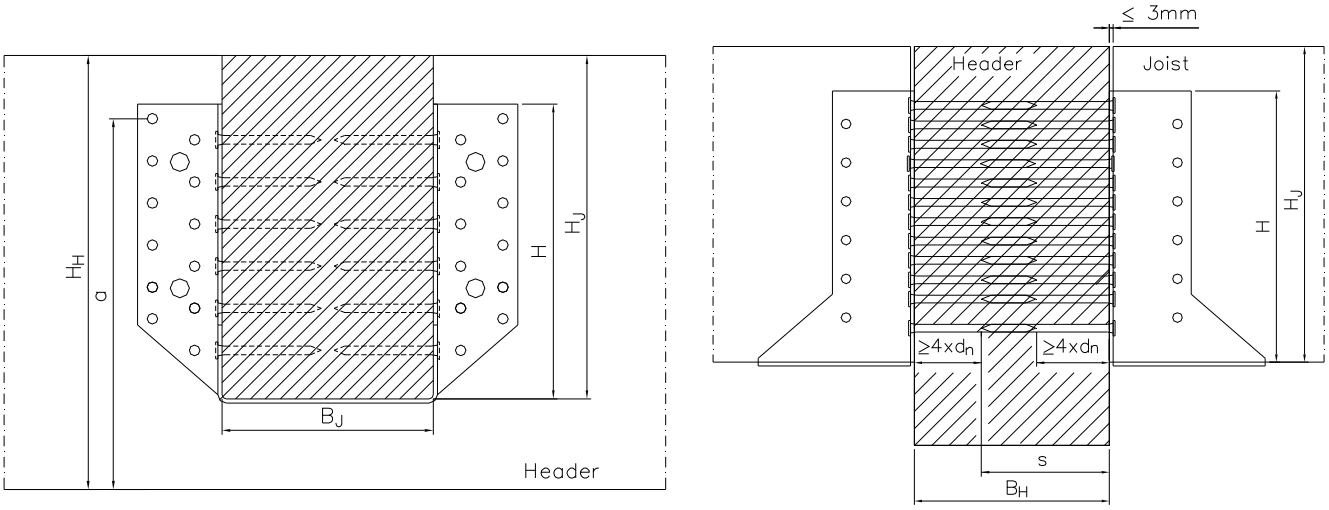

Joist hanger connected to concrete, lightweight concrete or a steel member by bolts

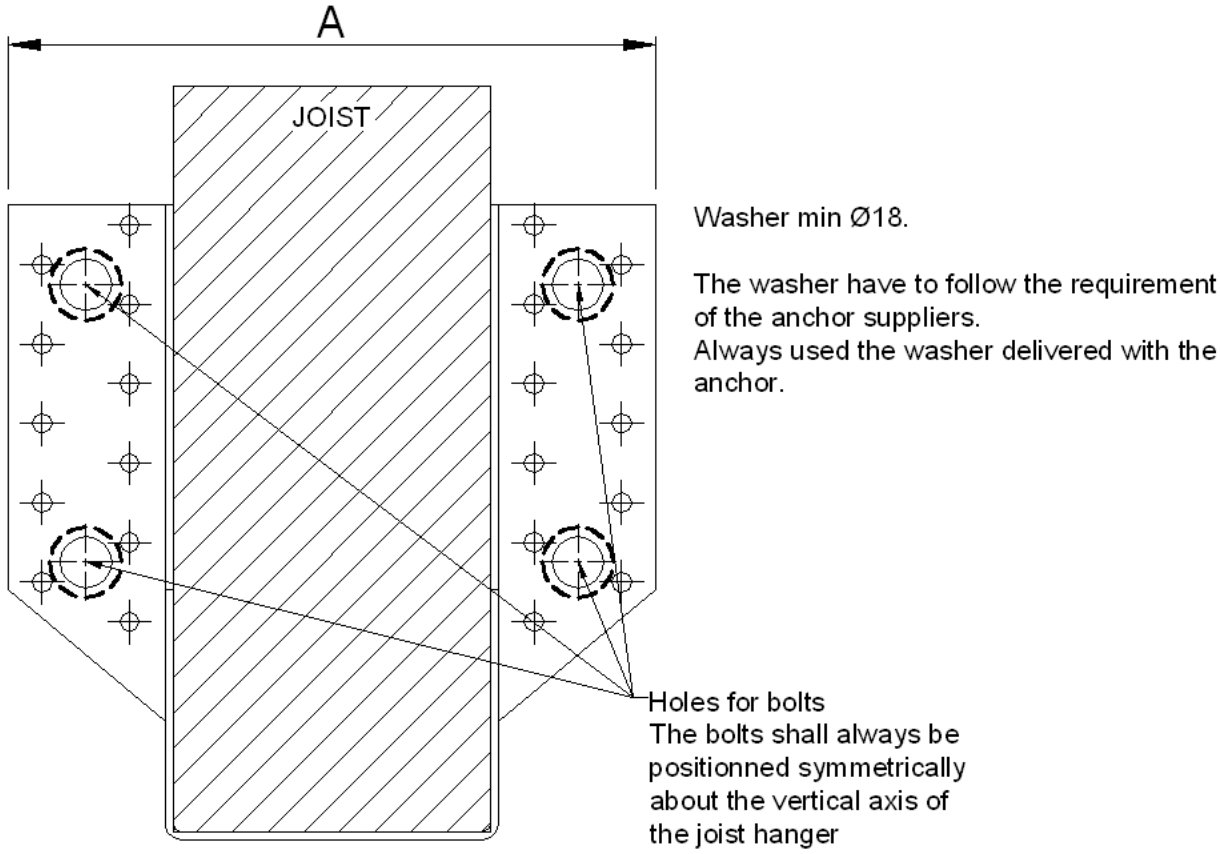

Conditions for using I-beam headers

When an I-beam is used as header beam it is a condition for the load-carrying capacity, that 2 backer blocks are installed, because it prevents a bending failure of the web in the I-beam as explained in the following. Further, the nails, which normally are nailed in the side of the solid header beam, can instead be nailed into the backer blocks. Therefore, the sum of the thicknesses of the backer blocks and the web shall at least be equal to the length of the nails in the header

For both reasons it is important that the backer block supports the underside of the top flange of the header I-beam and is sufficiently connected to the web of the head I-beam.

The rope effect results in a tensile force F_t directed toward the edge of the flange. If there are no backer blocks installed, there exists a risk for a bending failure by M_{web} at the neck of the web due to the torsion. With at backer block installed the torsional moment will be taken by a compression force $F_{c,web}$ between the backer block and the underside of the flange and tensile force in the web.

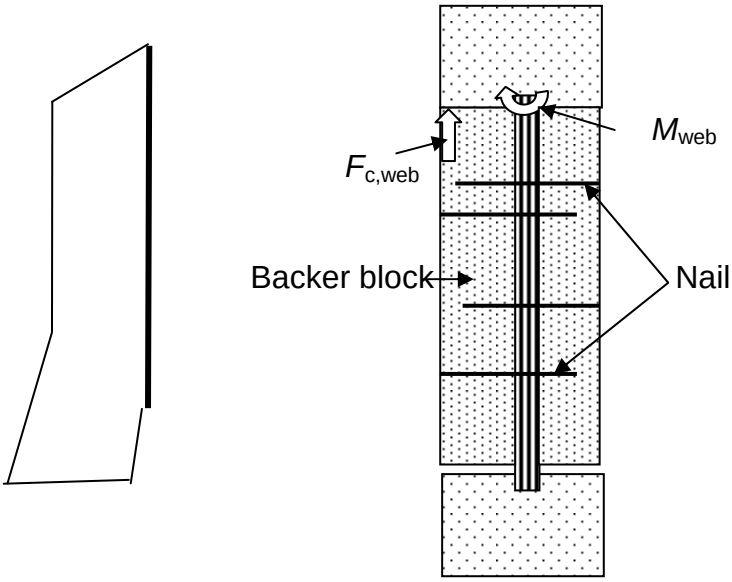

Static model for a vertical force downward. The header beam has been drawn a little away to the right to show the forces acting. The header is shown with the forces and moment acting on it.

The surface of the backer block shall be flush with the side of the flange and shall fit tight to the underside of the flange and shall be nailed with sufficient nails to secure, that the backer blocks and the web functions as one piece of solid timber. It is required that the number of nails in the backer block shall be determined from

$$n_{nail,backerblcok} = 2 \cdot n_{header}$$

where n_{header} is the total number of nails from the joist hanger into the header. If the header has a joist hanger on each side the number of nails shall be doubled.

The nails in the backer block shall have a length so their tip will go through the web and at least 20 mm into the opposite backer block.

The I-beam can be prevented from rotation by several means. For example can the wood based panel normally nailed to the top flange and the boards typically nailed to the bottom flange prevent the I-beam from rotating.

Conditions for using I-beam joists
When an I-beam is used as a joist it is a condition for the load-carrying capacity, that 2 web stiffeners are nailed to the web of the joist, one on each side.

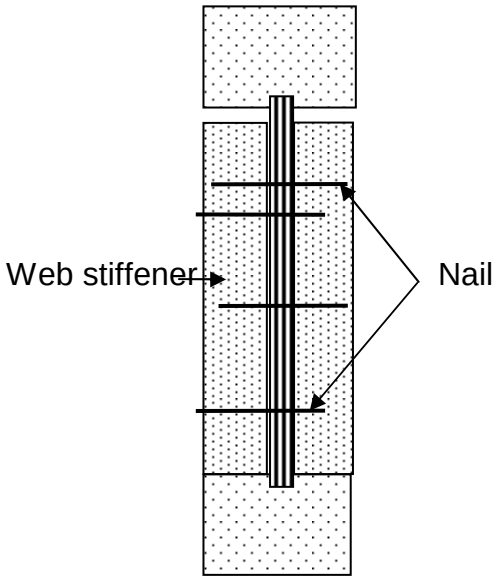

Web stiffeners on the joist at the joist hanger. The web stiffener shall fit to the bottom flange and have a width of 2/3 of the height between the inner sides of the flanges.

The surface of the web stiffeners shall be flush with the side of the flange of the joist and shall fit tight to the lower flange and shall be nailed with sufficient nails to secure, that the web stiffeners and the web functions as one piece of solid timber. So, the number of nails in each web stiffener shall be:

$$n_{nail,web-stif} = n_{joist}$$

where n_{joist} is the total number of nails from the joist hanger into the joist.
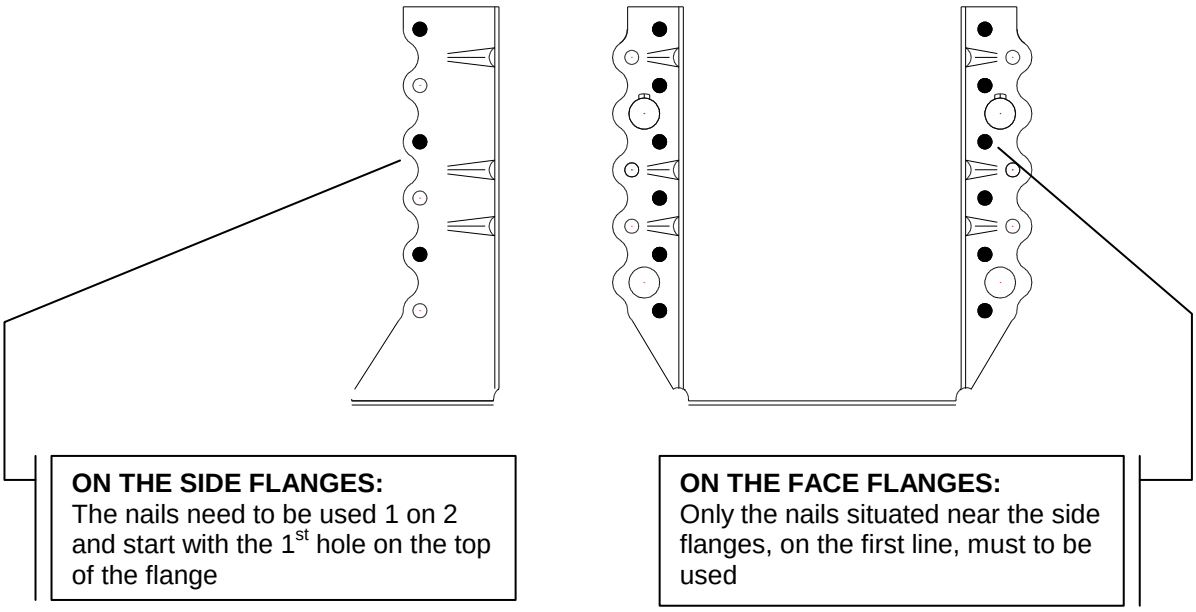
Partial nail fixing:
General application